SKF

Linear Motion & Precision Technologies

HYDROCAM Bolt Tensioners
Industrial Tightening Systems



The SKF Group

The SKF Group is an international industrial corporation owned by SKF Sweden AB. Founded in 1907, it operates in 130 countries and has some 40000 employees.

The company has over 80 manufacturing units throughout the world and a network of nearly 20000 distributors and retailers. SKF is the world leader in the rolling bearing business.

SKF Linear Motion & Precision Technologies

SKF Linear Motion & Precision Technologies is an organization within SKF which, as the name suggests, is dedicated to the manufacture, sales and service of linear motion products, high precision bearings and spindles.

It serves the market through its organization of 15 specialized sales companies located in Europe, North America and Japan.

In addition to the services provided by these sales companies, product and application support is available worldwide through the SKF international network.



- ● Specialized Linear Motion & Precison Technologies Sales Companies
- ○ SKF Bearing sales companies with Linear Motion sales staff
- ▲ Production facilities

Catalogue n° TSI 1102 AE
April 2001
Printed in France

© Copyright SKF 2001

The contents of this catalogue are the copyright of the publishers and may not be reproduced (even extracts) without permission. Every care has been taken to ensure the accuracy of the information contained in this catalogue but no liability can be accepted for any errors or omissions.

Earlier catalogues with data which is different than that contained herein are no longer valid.

We reserve the right to make changes required by technological developments.

Introduction 2
What makes up the HYDROCAM bolt tensioner 4
How a HYDROCAM tensioner works 5
Optimize your bolted assembly 6
Choose the best tightening solution 8
Recommendations for using HYDROCAM tensioners 10
Unit conversion 12
Torque/Tightening loads tables 13
Tables: Tension loads 26
Standard product range 29
Hydraulic force diagrams for standard tensioners 30
Summary Table: Standard tensioner characteristics 32
HTA: Multi-purpose 34
HTS: Small 36
HTS N: Thin 38
HTS 2: Thin and powerful 40
HTC R: Compact and powerful 42
HTH R: Thin and super-powerful 44
Customized standard tensioners 46
Special Tensioners 48
Special machines and control systems 50
Applications 52
Company resources and organization at the client's service 54
SKF Equipements' Services 56
Tensioner accessories 58
The BoltSafe sensor washer 62
Glossary of terms 68
Conclusion 69
Price request fax form 70
HYDROCAM tensioner information fax form 71

Introduction

SKF® has worked in the field of bolt-tightening by pre-load tension since the 1940's. At that time, design studies concentrated on the tightening of slewing rings, where the SKF group's subsidiary, RKS, is a leading specialist.

Since the 1940's, SKF Equipements has continuously furthered its bolt-tightening experience in every industrial sector and in many different types of applications.

Today, SKF Equipements offers two descriptive documents on the subject of bolt-tightening: the "Bolt-tightening Handbook", which discusses the technical aspects of bolt-tightening, and this product catalogue: the "HYDROCAM® Bolt-Tensioner - Industrial Tightening Systems" catalogue.

Well aware that good tightening control is extremely important economically, SKF Equipement offers both expertise and service to solve any problems involving the tightening of bolted assemblies.

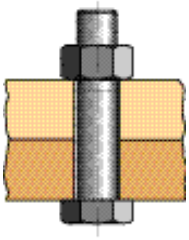

Screw and nut

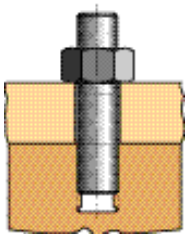

Stud with nut on one end

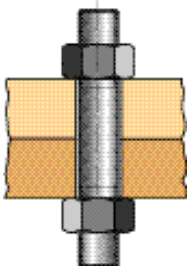

Stud with nuts on both ends

Just what is a bolted assembly ?

A bolted assembly quite simply means the putting together of at least two parts using one or several bolts. As is shown in the figure above, these bolts can be made up of screws and nuts, studs with nuts on one or both ends, and possibly washers.

In the following document, the word "bolt" includes these three types of screwing components.

Bolted assemblies are the most commonly used connecting systems in mechanics. And although they appear to be quite simple, bolted assemblies do pose several challenges at many levels: design department, assembly workshop, on-site, and maintenance.

Rough dimensioning methods are too often applied at the design stage, which leads to unnecessary oversizing. Such oversizing does not enhance product safety, quite the contrary...

The design and implementation of a bolted assembly requires a very strict methodological approach, for errors can lead to costly and often disastrous failures.

Several studies have shown that incidents encountered on bolted assemblies are most often due to improper design of the assembly (analysis, design, calculation, component choice) or poor implementation (tightening method, tooling, inspection).

Today it is known that of all the various causes of failure (overloading, design flaws, manufacturing defects, and others), the most frequent is improper assembly. Tightening problems, whether insufficient tightening, excessive tightening or heterogenous tightening, alone account for over 30% of all bolted assembly failures.

More specifically, 45% of all fatigue failures are estimated to be due to improper assembly.

Therefore, the importance of the design of the bolted assembly and the means used to tighten it are of utmost importance.

The “Bolt-tightening Handbook” clearly explains that “optimum tightening means a bolt which is not too tight and not too loose” and shows how to achieve the best tightening.

It reviews all the tightening methods and proves that the best tightening control is provided by the Hydrocam hydraulic tensioner.

This “Product Catalogue” describes all the products and services that SKF offers in order to enable you to better manage your bolted assemblies.

Both of these documents provide indispensable information on optimizing the bolted assemblies that you are designing and on choosing the best tightening method for your application. They describe the key aspects, which are:

- Quality
- Accuracy
- Homogeneity
- Ease of use

These provide additional advantages such as:

- Reliability and safety
- Optimized dimensions
- Time savings
- Cost reduction in use, control and maintenance.

In addition, this catalogue provides other useful information such as standard bolting dimensions, units conversion, and the conversion of torque into tension load...

As an example - did you know that the SKF hydraulic tensioner can tighten bolts from 5 to 500 mm ?

Please do not hesitate to contact SKF for your needs. You may be surprised by all the services SKF can provide in the field of bolted assembly tightening.



What makes up the Hydrocam bolt tensioner ?

A standard Hydrocam tensioner has a hydraulic body which, using a hydraulic fluid, exerts a strong tension load on the bolt through the brace screwed on that bolt. In some tensioner types (HTC R), the body is screwed directly on the bolt to be tightened. The body also rests on the skirt in order to apply the reaction force on the assembly to be tightened.

Prior to screwing the body-brace-skirt unit on the protruding end of the bolt, a socket has to be placed on the nut of the bolt. This nut can then be “turned down” (screwed until the lower surface of the nut comes into contact with the assembly bearing surface), by a tommy bar, while the tensioner applies the tension load.



Brace

The brace is screwed on the protruding end of the bolt, above the nut. It supplies the tension load exerted by the hydraulic body on the bolt.



Hydraulic body

Using the fluid under pressure, the hydraulic body creates the tension load on the brace by pushing on the skirt.

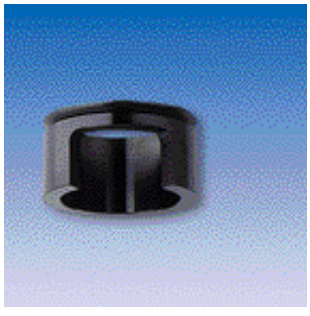

Skirt

The skirt is placed around the nut on the assembly to be tightened. It transmits the compression force to the assembly by reaction to the tension load applied on the bolt by the hydraulic body.



Socket for standard nut (optional)

In the case of assemblies with standard nuts, a socket is placed around the nut to effortlessly bring the nut into contact with the assembly. For this purpose, the outer surface of the socket is drilled with radial axis holes to hold the push rods. Turning down occurs while the tension load is applied by the hydraulic body.

How a Hydrocam tensioner works

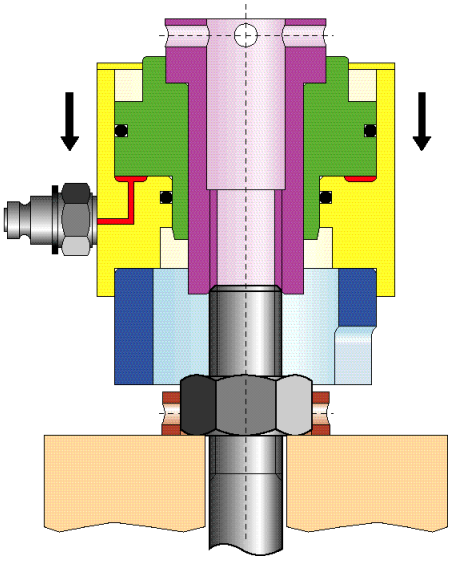

1 - The turndown socket is placed over the nut and the hydraulic tensioner grasps the bolt.

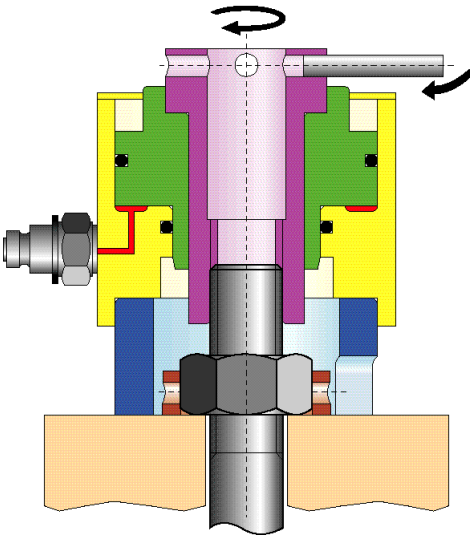

2 - The brace/retraction unit is screwed onto the protruding end of the bolt.

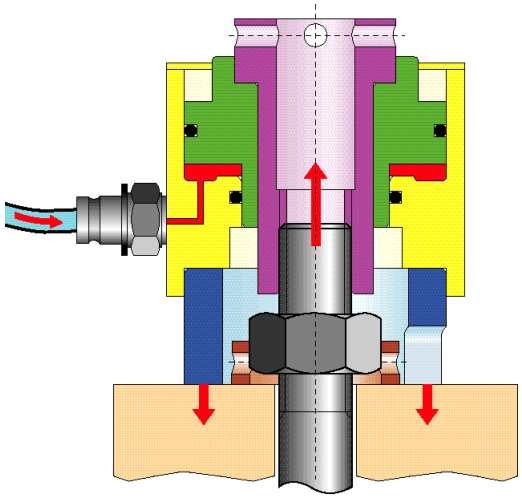

3 - After the hydraulic connections, the tensioner is pressurized and applies the required tractive force on the bolt.

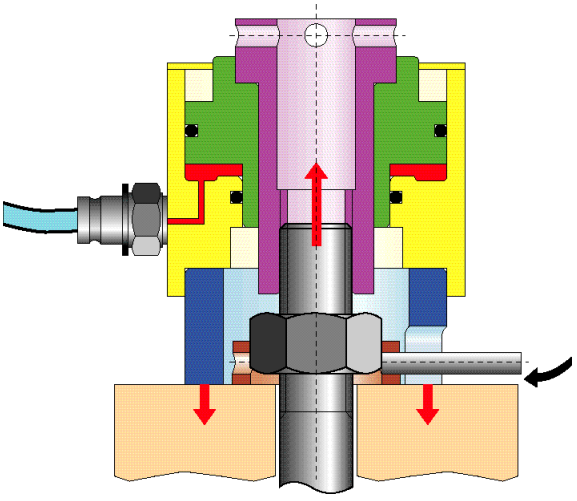

4 - While the pressure is maintained, the nut is turned down without loading, using the socket and the tommy bar.

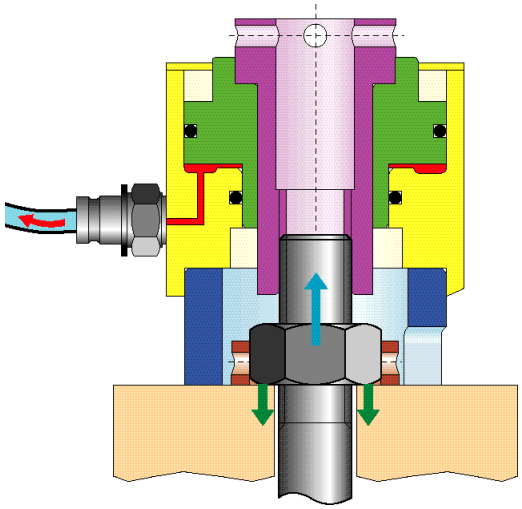

5 - Their pressure is released and the piston is pushed back. The tightening load is now exerted through bolt tension.

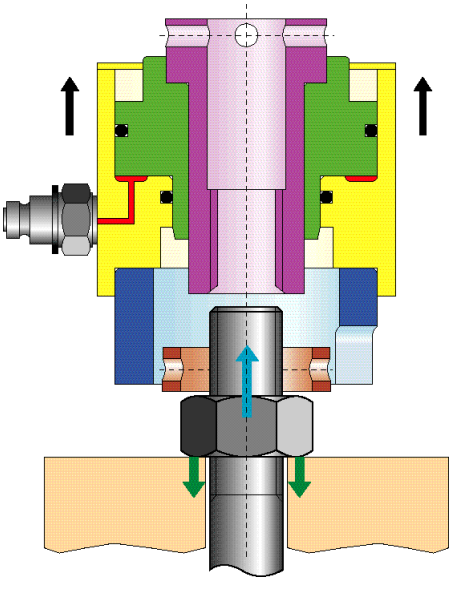

6 - The tensioner and the socket can be removed.

Optimize your bolted assembly

SKF Equipements provides recommendations and services for each one of these steps

1 Knowledge of the external load Fe

Action:
Determine the external load applied on the bolts in the assembly in order to calculate assembly sizing

Recommendation
- Take into account the bending moments for some types of assemblies (flanges, cantilevered assemblies)
- Use sensor washers to experimentally know the external force applied on the bolts.

2 Select the bolt characteristics

Action:
Choose the characteristics of the bolts from the very start:
- number of bolts in the assembly (n)
- class of bolts
- diameter of bolts (d)
- thread pitch (p)
- clamped length (L)

Recommendation
- Try to get the largest possible L/d ratio (preferably 5 or more)
- Use long enough bolts, with a protruding end above the net to screw the brace.

3 Define the Fo tightening pre-load

Action:
Take into account the following parameters:
- bolt stiffness (R_b)
- structure stiffness (R_s)

and define the final tightening pre-load for each bolt after the tightening operation has taken place.

Recommendation
- To avoid untightening: $Fo > Fe_{max}.R_s/n(R_s + R_b)$
- For assemblies under shearing forces (μ = friction coefficient) $\mu Fo > Fe_{max}/n$ (Fe_{max} case = pure shearing force).

4 Calculate the maximum tension load on the bolts

Action:
Calculate the maximum tension load on the bolts given the external load.
$F_{max} = Fo + Fe_{max}.R_b/n(R_s+R_b)$

Recommendation
See: The Bolt-tightening Handbook

5 Monitor the stress in the bolts

Action:

Calculate the maximum stress borne by the bolts in stressed section S

$\sigma_{max} = F_{max}/S$

Recommendation

- For the threaded part of the bolt, use the equivalent section (As) as the bolt section
- For the cylindrical parts, use the entire section
- In the event of a central link, take the section variation into account
- See the Bolt-tightening Handbook

6 Optimize bolt size

Action:

Try to increase the length to diameter ratio (L/d). If the maximum stress on the bolt is well within its yield point, the diameter can be reduced.

Recommendation

- The higher the L/d ratio and the higher the tightening stress, the better the fatigue behavior of a bolted assembly is. Tightening stress should be close to the yield point (preferably 80% Re). See pages 26 and 27 "Tightening Stress Chart"
- Likewise, in decreasing bolt stiffness, the share of the external load applied to the bolt is also decreased
- Choose the class of bolt material to appropriately resist the maximum load Fmax applied on the bolt
- See the "Bolt-tightening Handbook".

Use the following criteria to evaluate the optimization of your assembly

- ☐ Tightening stress is as close to 80% of Re as possible
- ☐ Highest possible L/d diameter
- ☐ Lowest assembly weight and size as possible
- ☐ Appropriate safety margin ?
- ☐ Tightening techniques have been taken into consideration since the design stages of the project

Recommendation

See: "Recommendations for the Use of Hydrocam Tensioners" p 10-11

Continue to optimize

no

The assembly is not optimised

yes

Optimized Assembly

Please send us your technical data using the fax form on page 71

or

Once the assembly is designed, choose the best Hydrocam Tensioner for your application, using the logic diagram on the following pages

Choose the best tightening solution: The HYDROCAM Hydraulic Bolt Tensioners

Designing the Assembly

See "Optimize your Bolted Assembly" pages 6-7

Note:

- Use a sensor washer for a direct reading of the residual load (page 62).
- Accuracy is also increased by measuring bolt elongation. Contact SKF Equipements for further information
- Ratio Fh/Fo can also be obtained in some cases by calculation

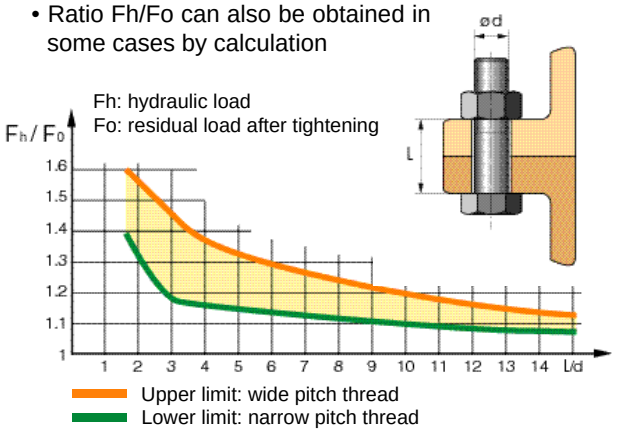

The Fh/Fo ratio as a function of bolt aspect ratio L/d for commonly used bolting steels

No extra charge for special thread

Your Situation

1 - Little space around the bolt	2 - Homogenous tightening (case of several bolts to be tightened)	3 - Tightening time and accuracy

SKF Solutions

Choose the right tensioner (pages 30 to 45)	Ideally, for simultaneous tightening, use as many tensioners as bolts to be tightened	• Select a tensioner with automatic piston return. If the most suitable tensioner does not have automatic return, check with SKF Equipements about adapting a return system. • For partial simultaneous tightening, use the most tensioners possible to save time and improve accuracy.
If you are having problems, - an adapted tensioner (page 46) - a special tensioner (pages 48 & 49) Contact SKF Equipements	• If you can only do partial simultaneous tightening, follow a tightening procedure (see the Bolt-tightening Handbook) • SKF Equipements can help you define a procedure which guarantees minimal dispersion for the number of bolts	

Tightening the Designed Assembly

Tightening pre-load Fo **is known**

- Knowing Fo, the final residual tightening pre-load on the bolt, determine the **hydraulic force Fh** in terms of the L/d ratio (clamped length over bolt diameter)
- See diagram opposite, showing Fh/Fo as a function of L/D

Check that the traction stress in the bolt remains below 0.90 Re during the tightening operation $\sigma_H = \frac{F_H}{S}$ $\sigma_H < 0.90\ Re$

As a function of the bolt diameter and the hydraulic force, **determine which Hydrocam tensioners can be used, based on the "Hydraulic force diagrams for standard tensioners"** (on pages 30 and 31)

Integrate your operational specifications

Tightening pre-load Fo is **unknown**

See "Optimize your bolted assembly" pages 6 & 7

Other tightening means used previously

Torque tightening:

$$Fo = \frac{T}{0.16\ p + \mu_1\ 0.582\ d_2 + \mu_2\ r_m}$$

See Torque/Tightening Pre-load Torque/tightening load table p. 13 to 25
See: Bolt-tightening Handbook

Heater rod tightening:

$$Fo = \alpha\ S\ E\ \Delta t + \frac{\theta\ p\ S\ E}{l}$$

See: Bolt-tightening Handbook

Other types of tightening:
Contact SKF Equipements

4 - Weight	5 - Environment	6 - Monitoring	7 - Automation
SKF Equipements manufactures light tensioners. Example: titanium (page 48)	SKF Equipements tensioners are used with water (page 48)	SKF Equipements recommends using sensor washers to monitor pre-load tension in the bolts (page 62)	SKF Equipements designs semi or fully-automatic tightening systems with remote control (pages 50 & 51)

To check the price of your Hydrocam tensioner, use the fax form on page 70

Recommendations for the Use of HYDROCAM Tensioners

Design in the use of tensioners from the very start of the design phase of your assembly.

For the very best Hydrocam Tensioner efficiency and usage, please follow the following recommendations from the very start of the design stage of the bolted assembly. Failure to observe these basic recommendations can result in problems for which SKF cannot be held liable. To operate the Hydrocam Tensioners, please see the user manual enclosed with the product.

Avoid

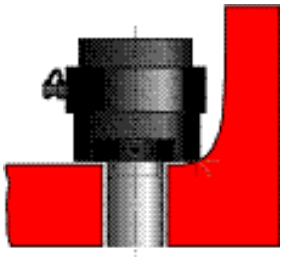

Insufficient flat area around the bolt

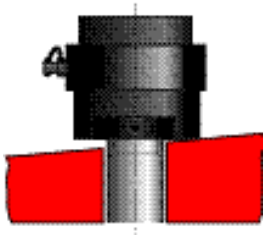

Bearing area is slanted with respect to the bolt axis

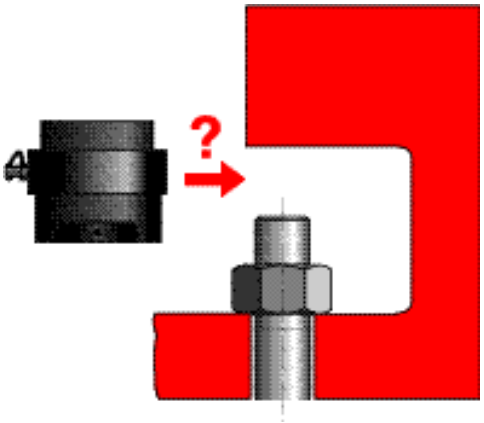

Not enough room to fit the tensioner

Recommended

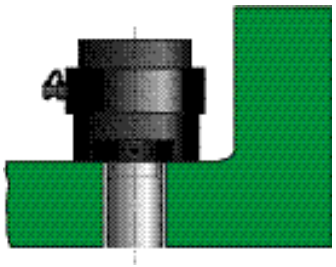

The lower part of the skirt must be in full contact with the assembly

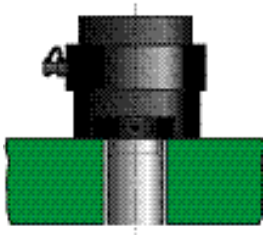

The skirt/assembly contact surface must be perpendicular to the bolt axis

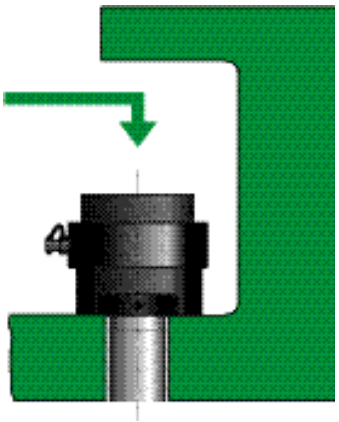

Design enough clearance to install the tensioner

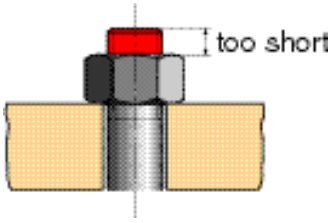

The protruding end of the bolt is too short

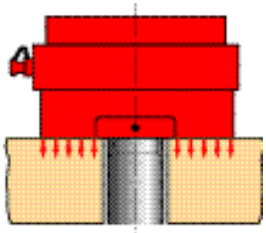

The tensioner is too big for the bolt –
not enough pressure

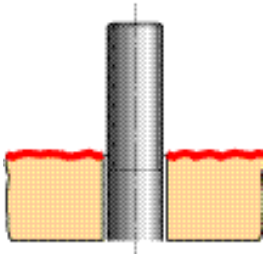

Surface is too rough

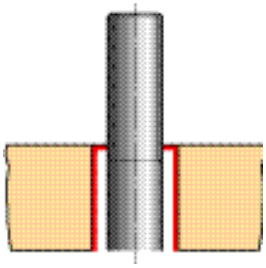

Diameter of the bolt hole is too big

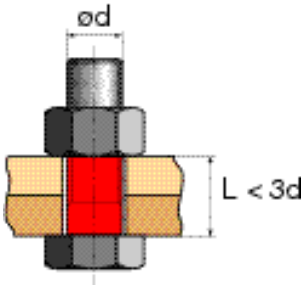

L/d ratio is too small

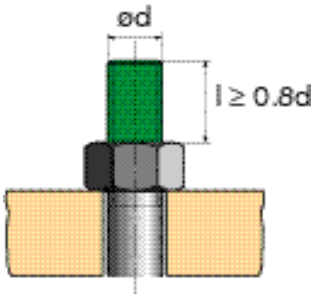

The length of the protruding end must provide
for screwing the tensioner brace on a length
of at least l > 0.80

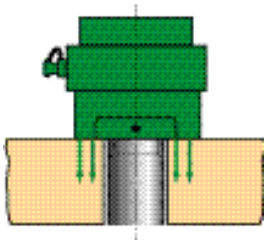

Tensioner diameter must be adapted to the bolt,
and must operate under high pressure
for the best tensioner and tightening performance

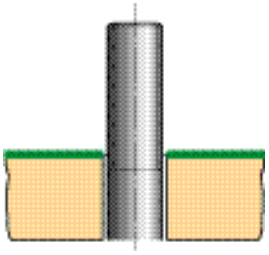

Surface condition under the Hydrocam tensioner
must be at least Ra 6.3

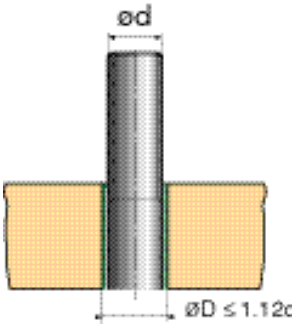

The bolt hole diameter must be as small as possible

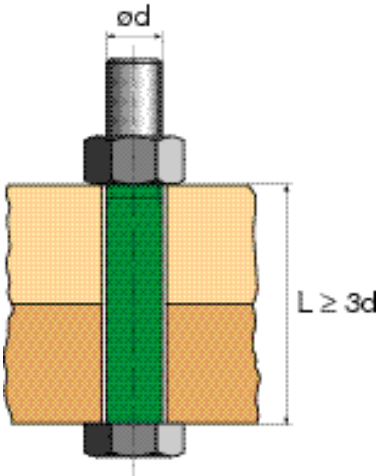

The L/d ratio must be as high as possible

Units Conversion

Metric system – Imperial system

Length:

Metric units			Imperial units
1 millimeter	(mm)	=	0.039370 in
1 centimeter	(cm)	=	0.03281 ft
1 meter	(m)	=	39.370 in
1 meter	(m)	=	3.2808 ft

Imperial units			Metric units
1 inch	(in)	=	25,4 mm
1 foot	(ft)	=	30,48 cm
1 inch	(in)	=	0,0254 m
1 foot	(ft)	=	0,3048 m

Force:

Metric units			Imperial units
1 newton	(N)	=	0.22481 lbf
1 kilo-newton	(kN)	=	224.81 lbf
1 kilogramme force	(*) (kgf)	=	2.20462 lbf

Imperial units			Metric units
1 pound force	(lbf)	=	4,4482 N
1 pound force	(lbf)	=	0,004448 kN
1 pound force	(lbf)	=	0,453593 kgf

(*) the "kilo" is not a unit of force as such. In practice, 1 kilo force (1 kgf) = 9.81 N

Torque:

Metric units			Imperial units
1 newton meter	(N.m)	=	0.73756 lbf.ft
1 meter kilo	(m.kgf)	=	7.233 lbf.ft
1 newton meter	(N.m)	=	8.8507 lbf.in
1 meter kilo	(m.kgf)	=	86.796 lbf.in

Imperial units			Metric units
1 pound force foot	(lbf.ft)	=	1,3558 N.m
1 pound force foot	(lbf.ft)	=	0,13826 m.kgf
1 pound force inch	(lbf.in)	=	0,113 N.m
1 pound force inch	(lbf.in)	=	0,0115 m.kgf

Stress - Pressure:

Metric units			Imperial units
1 bar		=	14.504 psi
1 Mega pascal	(MPa)	=	145.04 psi

Imperial units			Metric units
1 pound square inch (psi)		=	0,06895 bar
1 pound square inch (psi)		=	0,006895 MPa

Reminder:
1 bar = 1 daN/cm2
1 MPa = 1 N/mm2
1 MPa = 10 bar

Remarque: In practice, "1 kg" = 10 MPa
Example: "90 kilo" steel means that the yield point is 900 MPa.

Torque/Tightening load Tables

The tables on the following pages show the tightening load applied to a bolt when this bolt has been tightened with a torque wrench. This tightening load is strongly influenced by the friction coefficients from the threads and the nut face in contact with the assembly. Such friction is due to the tightening method using the torque wrench.

Torque / Tightening load - Metric system

Bolt diameter from 5 to 30 mm ..... pages 14 to 15

Bolt diameter from 33 to 72 mm ..... pages 16 to 17

Bolt diameter from 76 to 150 mm ..... pages 18 to 19

Torque / Tightening load - Imperial system

Bolt diameter from 1/4” to 1 1/4” ..... pages 20 to 21

Bolt diameter from 1 3/8” to 3 1/2” ..... pages 22 to 23

Bolt diameter from 3 3/4” to 6” ..... pages 24 to 25

Torque tightening therefore introduces great uncertainty in the actual value of the bolt's residual tightening pre-load. However, the tables on the following pages do establish an order of magnitude.

If the plan is to tighten an existing assembly with hydraulic tensioners instead of with the torque wrench, tensioners able to supply a tension force similar to torque tightening must be chosen. However, for the sake of precaution, we recommend further calculation of the required tension force based on the optimization of a bolted assembly on pages 6-7.

Reading the tables:

For a bolt diameter M39, tightened with a torque value of 3500 N.m. (approximately 350 m.kg), the tightening pre-load is 484 kN for a friction coefficient of 0.15.

If this tightening pre-load were applied to a bolt from class 8-8 (yield point: 640 MPa), the tightening stress in this bolt would be 75% of the yield point (Re). However, if the friction coefficient is 0.10, the same torque of 3500 N.m will generate in this bolt a tightening traction load of 695 kN leading to exceed the elastic limit.

Friction Coefficient:

0.10 (0.08 / 0.12): phosphate treated or galvanized bolt, good quality lubrication

0.15 (0.13 / 0.17): black or galvanized bolt, low quality lubrication

0.20 (0.18 / 0.25): regular bolts, no lubrication.

Tightening load (kN) - metric system

As a function of the torque (N.m)
of the diameter of the standard bolt from 5 to 30 mm
of the bolt friction coefficient

Ø Bolt (mm)	5			8			10			12			14			16		
Pitch (mm)	1			1.25			1.5			1.75			2			2		
Width across flats (mm)	10			13			17			19			22			24		
Friction coefficient	0.10	0.15	0.20	0.10	0.15	0.20	0.10	0.15	0.20	0.10	0.15	0.20	0.10	0.15	0.20	0.10	0.15	0.20
Torque (N.m)																		
10	12	8	7	9	6	5	7	5	4	6	4		5	4				
20	24	17	13	18	13	10	14	10	8	12	9	7	11	8	6	10		
30	35	25	20	27	19	15	21	15	11	19	13	10	16	11	9	15	10	
40	47	34	26	35	25	19	28	20	15	25	17	13	22	15	12	19	14	10
50		42	33	44	31	24	35	25	19	31	22	17	27	19	14	24	17	13
60			39	53	38	29	42	30	23	37	26	20	33	23	17	29	20	16
70			46		44	34	49	34	26	43	30	23	38	26	20	34	24	18
80					50	39	56	39	30	49	35	27	43	30	23	39	27	21
90						44	63	44	34	56	39	30	49	34	26	44	31	24
100						49		49	38	62	43	33	54	38	29	48	34	26
120								59	45	74	52	40	65	45	35	58	41	31
140									53	87	61	47	76	53	41	68	48	37
160									61		69	53	87	60	46	77	54	42
180											78	60	98	68	52	87	61	47
200											87	67	108	76	58	97	68	52
250												83		94	72	121	85	65
300														113	87	145	102	79
350															101		119	92
400															116		136	105
450																	153	118
500																		131
550																		144
600																		
650																		
700																		
750																		
800																		
850																		
900																		
950																		
1000																		
1200																		
1400																		
1600																		
1800																		
2000																		
2500																		
3000																		
3500																		
4000																		

Ø Bolt (mm)	18			20			22			24			27			30		
Pitch (mm)	2.5			2.5			2.5			3			3			3.5		
Width across flats (mm)	27			30			32			36			41			46		
Friction coefficient	0.10	0.15	0.20	0.10	0.15	0.20	0.10	0.15	0.20	0.10	0.15	0.20	0.10	0.15	0.20	0.10	0.15	0.20
Torque (N.m)																		
10																		
20																		
30																		
40	17																	
50	22			19														
60	26	18		23														
70	30	21	16	27	19													
80	35	24	19	31	22		29											
90	39	27	21	35	24	19	33											
100	44	30	23	39	27	21	36	26		32								
120	52	37	28	46	33	25	44	31		39								
140	61	43	33	54	38	29	51	36	27	45	32		40					
160	70	49	37	62	43	34	58	41	31	52	36		46					
180	78	55	42	70	49	38	66	46	35	58	41	31	52					
200	87	61	47	77	54	42	73	51	39	64	45	35	58	40		52		
250	109	76	58	97	68	52	91	64	49	81	57	44	72	50	39	65		
300	131	91	70	116	82	63	109	77	59	97	68	52	86	60	46	78	54	
350	152	107	82	135	95	73	127	89	69	113	79	61	101	70	54	91	63	
400	174	122	94	155	109	84	146	102	79	129	91	70	115	80	62	104	72	55
450		137	105	174	122	94	164	115	88	145	102	79	129	90	69	117	81	62
500		152	117	193	136	105	182	128	98	161	113	87	144	100	77	130	90	69
550		167	129	213	149	115	200	140	108	177	125	96	158	110	85	143	99	76
600		183	140		163	126	219	153	118	193	136	105	173	121	93	156	108	83
650			152		177	136	237	166	128	210	147	113	187	131	100	169	117	90
700			164		190	147	255	179	137	226	159	122	201	141	108	182	126	97
750			175		204	157		191	147	242	170	131	216	151	116	195	135	104
800					217	168		204	157	258	181	140	230	161	123	208	144	111
850						178		217	167	274	193	148	244	171	131	221	153	118
900						189		230	177	290	204	157	259	181	139	234	162	124
950						199		242	187	306	215	166	273	191	147	247	171	131
1000						210		255	196		226	175	288	201	154	259	180	138
1200									236		272	210	345	241	185	311	217	166
1400											317	244	403	281	216	363	253	194
1600												279		321	247	415	289	221
1800												314		362	278	467	325	249
2000														402	309	519	361	277
2500															386		451	346
3000																	541	415
3500																		484
4000																		553

Tightening load (kN) - metric system

As a function of the torque (N.m)
of the diameter of the standard bolt from 33 to 72 mm
of the bolt friction coefficient

Ø Bolt (mm)	33			36			39			42			45			48		
Pitch (mm)	3.5			4			4			4.5			4.5			5		
Width across flats (mm)	50			55			60			65			70			75		
Friction coefficient	0.10	0.15	0.20	0.10	0.15	0.20	0.10	0.15	0.20	0.10	0.15	0.20	0.10	0.15	0.20	0.10	0.15	0.20
Torque (N.m)																		
300	71																	
350	83			75														
400	95			86														
450	107	74		97			89											
500	118	83		107	75		99											
550	130	91	70	118	82		109			101								
600	142	99	76	129	90		119			110								
650	154	107	82	139	97	75	129	90		119								
700	166	116	89	150	105	81	139	97		128			120					
750	178	124	95	161	112	86	149	104		137			128					
800	189	132	101	172	120	92	159	111		146	102		137					
850	201	140	108	182	127	98	169	117	90	155	108		145					
900	213	149	114	193	135	104	179	124	95	165	115		154			143		
950	225	157	120	204	142	109	189	131	101	174	121		163			151		
1000	237	165	127	215	150	115	199	138	106	183	127	98	171	119		159		
1200	284	198	152	258	180	138	238	166	127	219	153	117	205	143		191		
1400	331	231	177	300	210	161	278	194	148	256	178	137	239	166	128	223	155	
1600	379	264	203	343	240	184	318	221	170	292	204	156	274	190	146	255	177	
1800	426	297	228	386	270	207	357	249	191	329	229	176	308	214	164	287	199	153
2000	474	330	253	429	300	230	397	276	212	366	255	196	342	238	182	318	222	170
2500	592	413	317	537	375	288	497	346	265	457	319	244	428	297	228	398	277	212
3000		495	380	644	450	346	596	415	318	548	382	293	513	357	273	478	332	255
3500		578	444		525	403	695	484	371	640	446	342	599	416	319	557	388	297
4000			507		600	461	794	553	424	731	510	391	684	476	364	637	443	340
4500			570		675	518		622	477	823	573	440	770	535	410	716	499	382
5000						576		691	530	914	637	489	855	594	456	796	554	425
5500						633		760	583	1005	701	538	941	654	501	876	609	467
6000						691		829	636		764	587	1026	713	547	955	665	510
6500									689		828	636	1112	773	592	1035	720	552
7000									742		892	685		832	638	1114	776	595
7500									795		956	733		892	683	1194	831	637
8000									848			782		951	729	1274	886	680
8500												831		1011	774		942	722
9000												880		1070	820		997	765
9500												929		1129	866		1053	807
10000												978			911		1108	850
12000															1093		1330	1020
14000																		1190
16000																		1360
18000																		
20000																		
25000																		
30000																		
35000																		
40000																		

Ø Bolt (mm)	52			56			60			64			68			72		
Pitch (mm)	5			5.5			5.5			6			6			6		
Width across flats (mm)	80			85			90			95			100			105		
Friction coefficient	0.10	0.15	0.20	0.10	0.15	0.20	0.10	0.15	0.20	0.10	0.15	0.20	0.10	0.15	0.20	0.10	0.15	0.20
Torque (N.m)																		
300																		
350																		
400																		
450																		
500																		
550																		
600																		
650																		
700																		
750																		
800																		
850																		
900																		
950																		
1000	150																	
1200	180																	
1400	210	146		197														
1600	240	166		225														
1800	270	187	143	253			240											
2000	300	208	159	281	195		266			251								
2500	375	260	199	351	244	187	333	231		314			299					
3000	450	312	239	421	293	224	399	277		377	262		359			343		
3500	525	364	279	491	342	262	466	323	247	440	305		419	290		400		
4000	599	416	319	561	390	299	532	369	283	502	349	267	479	332		458		
4500	674	468	359	632	439	337	599	415	318	565	392	301	539	373	286	515	356	
5000	749	520	398	702	488	374	665	462	353	628	436	334	599	415	317	572	396	
5500	824	572	438	772	537	411	732	508	389	691	480	367	659	456	349	629	435	333
6000	899	624	478	842	585	449	799	554	424	753	523	401	718	498	381	687	475	363
6500	974	676	518	912	634	486	865	600	459	816	567	434	778	539	413	744	515	393
7000	1049	728	558	983	683	523	932	646	495	879	610	468	838	581	444	801	554	424
7500	1124	780	598	1053	732	561	998	692	530	942	654	501	898	622	476	858	594	454
8000	1199	832	637	1123	781	598	1065	739	565	1005	698	534	958	664	508	915	633	484
8500	1274	884	677	1193	829	636	1131	785	601	1067	741	568	1018	705	540	973	673	514
9000	1349	936	717	1263	878	673	1198	831	636	1130	785	601	1078	747	571	1030	712	545
9500	1424	988	757	1334	927	710	1264	877	671	1193	828	635	1137	788	603	1087	752	575
10000	1499	1040	797	1404	976	748	1331	923	707	1256	872	668	1197	830	635	1144	792	605
12000		1249	956		1171	897	1597	1108	848	1507	1046	802	1437	996	762	1373	950	726
14000		1457	1116		1366	1047	1863	1292	989	1758	1221	935	1676	1162	889	1602	1108	847
16000			1275		1561	1196		1477	1131	2009	1395	1069	1916	1328	1016	1831	1267	968
18000			1434		1756	1346		1662	1272	2260	1570	1202	2155	1494	1143	2060	1425	1089
20000						1496		1846	1413		1744	1336		1660	1270	2288	1583	1210
25000									1767		2180	1670		2075	1587		1979	1513
30000												2004			1905		2375	1815
35000												2338			2222			2118
40000																		2421

Tightening load (kN) - metric system

As a function of the torque (N.m)
of the diameter of the standard bolt from 76 to 150 mm
of the bolt friction coefficient

Ø Bolt (mm)	76			80			85			90			95			100		
Pitch (mm)	6			6			6			6			6			6		
Width across flats (mm)	110			115			120			130			135			145		
Friction coefficient	0.10	0.15	0.20	0.10	0.15	0.20	0.10	0.15	0.20	0.10	0.15	0.20	0.10	0.15	0.20	0.10	0.15	0.20
Torque (N.m)																		
3500	383																	
4000	438			420														
4500	493			473			454											
5000	548	378		525			505											
5500	603	416		578			555			516								
6000	657	454		631	435		605			563								
6500	712	492	376	683	471		656	452		610			588					
7000	767	530	405	736	507		706	487		657			633					
7500	822	568	434	788	544	415	757	521		704			679					
8000	876	605	462	841	580	443	807	556		751	516		724			678		
8500	931	643	491	893	616	470	858	591	451	798	548		769			720		
9000	986	681	520	946	652	498	908	626	477	845	580		814			763		
9500	1041	719	549	998	689	526	959	660	504	891	613		859	590		805		
10000	1096	757	578	1051	725	553	1009	695	530	938	645	491	905	621		848		
12000	1315	908	694	1261	870	664	1211	834	636	1126	774	589	1086	745	567	1017	697	
14000	1534	1059	809	1471	1015	775	1413	973	742	1314	903	688	1267	869	662	1187	813	
16000	1753	1211	925	1682	1160	885	1614	1112	848	1501	1032	786	1448	994	756	1356	929	707
18000	1972	1362	1040	1892	1305	996	1816	1251	954	1689	1161	884	1629	1118	851	1526	1045	795
20000	2191	1514	1156	2102	1450	1107	2018	1390	1060	1877	1290	982	1809	1242	946	1695	1161	883
25000	2739	1892	1445	2627	1812	1383	2523	1738	1325	2346	1612	1228	2262	1553	1182	2119	1452	1104
30000	3287	2270	1734	3153	2175	1660	3027	2085	1590	2815	1935	1474	2714	1863	1418	2543	1742	1325
35000		2649	2023	3678	2537	1936	3532	2433	1855	3284	2257	1719	3167	2174	1655	2967	2033	1546
40000		3027	2312		2900	2213	4036	2780	2120	3754	2579	1965	3619	2484	1891	3390	2323	1767
45000		3406	2601		3262	2490		3128	2385	4223	2902	2210	4071	2795	2128	3814	2613	1988
50000			2890		3625	2766		3475	2650	4692	3224	2456	4524	3105	2364	4238	2904	2208
55000			3179			3043		3823	2915		3547	2702	4976	3416	2600	4662	3194	2429
60000			3468			3320		4170	3180		3869	2947	5428	3726	2837	5086	3484	2650
65000						3596			3445		4192	3193		4037	3073	5509	3775	2871
70000									3710		4514	3438		4347	3310	5933	4065	3092
75000									3975		4836	3684		4658	3546		4355	3313
80000									4240			3930		4968	3782		4646	3533
85000												4175		5279	4019		4936	3754
90000												4421			4255		5227	3975
95000												4666			4492		5517	4196
100000															4728		5807	4417

Ø Bolt (mm)	110			120			125			130			140			150		
Pitch (mm)	6			6			6			6			6			6		
Width across flats (mm)	155			170			180			185			200			210		
Friction coefficient	0.10	0.15	0.20	0.10	0.15	0.20	0.10	0.15	0.20	0.10	0.15	0.20	0.10	0.15	0.20	0.10	0.15	0.20
Torque (N.m)																		
3500																		
4000																		
4500																		
5000																		
5500																		
6000																		
6500																		
7000																		
7500																		
8000																		
8500																		
9000																		
9500																		
10000	794																	
12000	953																	
14000	1112	761		1019														
16000	1271	869		1165			1105											
18000	1430	978	743	1311			1243			1210								
20000	1589	1086	826	1456	994		1381			1345			1249					
25000	1986	1358	1032	1820	1242	943	1727	1177		1681	1145		1561					
30000	2383	1630	1238	2185	1491	1132	2072	1412	1071	2017	1374		1873	1274		1785		
35000	2780	1901	1445	2549	1739	1320	2417	1648	1250	2353	1603	1215	2185	1486		2083		
40000	3177	2173	1651	2913	1988	1509	2763	1883	1428	2689	1832	1389	2497	1699	1287	2380		
45000	3574	2445	1858	3277	2236	1697	3108	2119	1607	3025	2061	1563	2809	1911	1448	2678	1819	
50000	3971	2716	2064	3641	2485	1886	3453	2354	1786	3361	2290	1736	3122	2123	1609	2975	2022	
55000	4368	2988	2270	4005	2733	2075	3799	2589	1964	3697	2519	1910	3434	2336	1770	3273	2224	1684
60000	4766	3259	2477	4369	2982	2263	4144	2825	2143	4034	2748	2084	3746	2548	1930	3570	2426	1837
65000	5163	3531	2683	4733	3230	2452	4489	3060	2321	4370	2977	2257	4058	2760	2091	3868	2628	1990
70000	5560	3803	2890	5097	3479	2640	4835	3295	2500	4706	3206	2431	4370	2973	2252	4165	2830	2143
75000	5957	4074	3096	5461	3727	2829	5180	3531	2678	5042	3435	2605	4682	3185	2413	4463	3032	2297
80000	6354	4346	3302	5825	3976	3018	5525	3766	2857	5378	3664	2778	4995	3397	2574	4760	3235	2450
85000	6751	4618	3509	6190	4224	3206	5871	4002	3035	5714	3893	2952	5307	3610	2735	5058	3437	2603
90000	7148	4889	3715	6554	4473	3395	6216	4237	3214	6050	4122	3125	5619	3822	2896	5355	3639	2756
95000		5161	3921	6918	4721	3583	6561	4472	3392	6386	4351	3299	5931	4034	3057	5653	3841	2909
100000		5432	4128	7282	4970	3772	6907	4708	3571	6723	4580	3473	6243	4246	3217	5950	4043	3062

Tightening load (lbs) - imperial system

As a function of the torque (ft.lb)
of the diameter of the standard bolt from 1/4” to 1 1/4”
of the bolt friction coefficient

Ø Bolt (in)	1/4”			5/16”			3/8”			7/16”			1/2”			9/16”		
Nber of threads/inch	20			18			16			14			13			12		
Width across flats (in)	7/16”			1/2”			9/16”			5/8”			3/4”			27/32”		
Friction coefficient	0.10	0.15	0.20	0.10	0.15	0.20	0.10	0.15	0.20	0.10	0.15	0.20	0.10	0.15	0.20	0.10	0.15	0.20
Torque (ft.lb)																		
5	1556	1114	867	1350	964	750												
10	3111	2227	1735	2700	1928	1499	2382	1700	1322	2126	1519		1808	1284				
20	6223	4455	3469	5400	3856	2998	4764	3400	2643	4252	3038	2364	3615	2568	1991	3230		
30		6682	5204	8100	5783	4497	7147	5100	3965	6378	4558	3546	5423	3852	2987	4846	3435	
40			6938		7711	5996	9529	6800	5286	8503	6077	4728	7230	5136	3982	6461	4580	3547
50					9639	7495	11911	8500	6608	10629	7596	5910	9038	6420	4978	8076	5725	4434
60						8995		10200	7930	12755	9115	7092	10846	7704	5974	9691	6870	5320
70								11900	9251	14881	10635	8274	12653	8988	6969	11306	8014	6207
80									10573	17007	12154	9456	14461	10272	7965	12921	9159	7094
90									11894		13673	10638	16269	11556	8961	14537	10304	7981
100											15192	11820	18076	12840	9956	16152	11449	8867
120												14183	21691	15408	11947	19382	13739	10641
140												16547		17976	13939	22613	16029	12414
160														20544	15930	25843	18319	14188
180															17921		20609	15961
200															19912		22898	17735
250																	28623	22168
300																		26602
350																		
400																		
450																		
500																		
550																		
600																		
650																		
700																		
750																		
800																		
850																		
900																		
950																		
1000																		
1200																		
1400																		
1600																		
1800																		
2000																		
2500																		
3000																		
3500																		
4000																		

Ø Bolt (in)	5/8"			3/4"			7/8"			1"			1 1/8"			1 1/4"		
Nber of threads/inch	11			10			9			8			7			7		
Width across flats (in)	15/16"			1/18"			1 5/16"			1 1/2"			1 11/16"			1 7/8"		
Friction coefficient	0.10	0.15	0.20	0.10	0.15	0.20	0.10	0.15	0.20	0.10	0.15	0.20	0.10	0.15	0.20	0.10	0.15	0.20
Torque (ft.lb)																		
5																		
10																		
20																		
30																		
40	5829																	
50	7286			6141														
60	8744	6192		7369														
70	10201	7224	5592	8597	6060													
80	11658	8256	6391	9825	6926		8471											
90	13115	9288	7189	11053	7792	6016	9530											
100	14573	10320	7988	12281	8657	6685	10589	7447		9283								
120	17487	12383	9586	14737	10389	8022	12707	8936		11139								
140	20402	14447	11183	17193	12120	9359	14825	10426	8040	12996	9132		11530					
160	23316	16511	12781	19650	13852	10696	16943	11915	9188	14853	10437		13178					
180	26231	18575	14379	22106	15583	12033	19061	13404	10337	16709	11742	9051	14825					
200	29145	20639	15976	24562	17315	13370	21178	14894	11485	18566	13046	10057	16472	11584				
250		25799	19970	30703	21643	16712	26473	18617	14357	23207	16308	12571	20590	14480	11166	18754		
300		30959	23964	36843	25972	20055	31768	22341	17228	27848	19570	15085	24708	17376	13400	22505		
350			27958	42984	30301	23397	37062	26064	20099	32490	22831	17599	28826	20272	15633	26256	18375	
400			31953	49124	34630	26740	42357	29787	22971	37131	26093	20113	32944	23168	17866	30007	20999	
450					38958	30082	47652	33511	25842	41773	29354	22628	37062	26064	20099	33758	23624	
500					43287	33425	52946	37234	28713	46414	32616	25142	41180	28960	22333	37509	26249	20189
550					47616	36767	58241	40958	31585	51056	35878	27656	45298	31856	24566	41259	28874	22208
600						40110		44681	34456	55697	39139	30170	49416	34752	26799	45010	31499	24227
650						43452		48404	37327	60338	42401	32684	53534	37648	29032	48761	34124	26246
700						46795		52128	40199	64980	45662	35198	57652	40544	31266	52512	36749	28265
750								55851	43070	69621	48924	37713	61770	43440	33499	56263	39374	30284
800								59575	45941	74263	52185	40227	65888	46336	35732	60014	41999	32303
850									48813	78904	55447	42741	70007	49232	37965	63765	44624	34321
900									51684	83545	58709	45255	74125	52128	40199	67515	47249	36340
950									54555	88187	61970	47769	78243	55024	42432	71266	49874	38359
1000									57427		65232	50283	82361	57920	44665	75017	52499	40378
1200									68912		78278	60340	98833	69504	53598	90021	62998	48454
1400											91325	70397	11530	81088	62531	105024	73498	56529
1600												80453	5	92672	71464	120027	83998	64605
1800												90510		10425	80398	135031	94498	72681
2000														6	89331	150034	104997	80756
2500														11584	11166		131247	100945
3000														0	3		157496	121134
3500																		141324
4000																		161513

Tightening load (lbs) - imperial system as a function of the torque

Ø Bolt (in)	1 3/8"			1 1/2"			1 3/4"			2"			2 1/4"		
Nber of threads/inch	6			6			5			4 1/2			4 1/2		
Width across flats (in)	2 1/16"			2 1/4"			2 5/8"			3"			3 3/8"		
Friction coefficient	0.10	0.15	0.20	0.10	0.15	0.20	0.10	0.15	0.20	0.10	0.15	0.20	0.10	0.15	0.20
Torque (ft.lb)															
300	20326														
350	23713			21946											
400	27101			25081											
450	30489	21394		28216											
500	33876	23771	20140	31352	21913										
550	37264	26148	21971	34487	24105		29471								
600	40651	28525	23802	37622	26296		32150								
650	44039	30902	25633	40757	28487	21896	34829								
700	47427	33279	27464	43892	30679	23580	37509			32919					
750	50814	35656	29295	47027	32870	25265	40188	28124		35270					
800	54202	38033	31126	50162	35062	26949	42867	29999		37622					
850	57590	40410	32956	53298	37253	28633	45546	31874		39973					
900	60977	42787	34787	56433	39444	30317	48225	33749		42325					
950	64365	45165	36618	59568	41636	32002	50904	35624	27399	44676					
1000	67752	47542	43942	62703	43827	33686	53584	37499	28842	47027	32870		42299		
1200	81303	57050	51266	75244	52592	40423	64300	44999	34610	56433	39444		50758		
1400	94853	66558	58589	87784	61358	47160	75017	52499	40378	65838	46018		59218	41191	
1600	108404	76067	65913	100325	70123	53898	85734	59999	46146	75244	52592	40423	67678	47075	
1800	121954	85575	73237	112866	78888	60635	96451	67498	51915	84649	59166	45476	76138	52959	
2000	135505	95083	91546	125406	87654	67372	107167	74998	57683	94055	65740	50529	84597	58844	45111
2500	169381	118854	109855	156758	109567	84215	133959	93748	72104	117568	82175	63161	105747	73555	56388
3000		142625	128164	188109	131481	101058	160751	112497	86525	141082	98611	75794	126896	88265	67666
3500		166396	146473		153394	117901	187543	131247	100945	164596	115046	88426	148046	102976	78944
4000			164782		175308	134744	214335	149996	115366	188109	131481	101058	169195	117687	90221
4500					197221	151587	241127	168746	129787	211623	147916	113690	190344	132398	101499
5000						168430	267918	187496	144208	235136	164351	126323	211494	147109	112777
5500						185273		206245	158628	258650	180786	138955	232643	161820	124054
6000						202116		224995	173049	282164	197221	151587	253792	176531	135332
6500								243744	187470	305677	213656	164219	274942	191242	146610
7000								262494	201891	329191	230091	176852	296091	205953	157887
7500									216312		246526	189484	317241	220664	169165
8000									230732		262961	202116	338390	235374	180443
8500									245153		279397	214749	359539	250085	191720
9000									259574		295832	227381	380689	264796	202998
9500											312267	240013	401838	279507	214276
10000											328702	252645	422987	294218	225553
12000												303174		353062	270664
14000												353703		411905	315775
16000															360885
18000															405996
20000															451107
25000															
30000															
35000															
40000															
45000															
50000															
55000															
60000															
65000															
70000															
75000															

(ft.lb.) and of the diameter of the standard bolt from 1 3/8” to 3 1/2” and of the bolt friction coefficient

Ø Bolt (in)	2 1/2”			2 3/4”			3”			3 1/4”			3 1/2”		
Nber of threads/inch	4			4			4			4			4		
Width across flats (in)	3 3/4”			4 1/8”			4 1/2”			4 7/8”			5 1/4”		
Friction coefficient	0.10	0.15	0.20	0.10	0.15	0.20	0.10	0.15	0.20	0.10	0.15	0.20	0.10	0.15	0.20
Torque (ft.lb)															
300															
350															
400															
450															
500															
550															
600															
650															
700															
750															
800															
850															
900															
950															
1000															
1200															
1400	53233														
1600	60838														
1800	68443			62769											
2000	76047	52922		69743											
2500	95059	66153		87179			80506								
3000	114071	79383	60873	104615	72539		96607								
3500	133083	92614	71018	122051	84629	64770	112708	77912		104694					
4000	152095	105845	81164	139487	96719	74023	128809	89042		119650					
4500	171107	119075	91309	156923	108809	83276	144911	100172	76542	134607	92806		125671		
5000	190118	132306	101455	174359	120899	92529	161012	111303	85046	149563	103118		139634		
5500	209130	145536	111600	191795	132989	101782	177113	122433	93551	164519	113430		153598		
6000	228142	158767	121746	209230	145079	111034	193214	133563	102055	179475	123741	94420	167561	115265	
6500	247154	171998	131891	226666	157168	120287	209315	144693	110560	194432	134053	102288	181524	124870	
7000	266166	185228	142037	244102	169258	129540	225416	155824	119065	209388	144365	110157	195488	134476	
7500	285178	198459	152182	261538	181348	138793	241518	166954	127569	224344	154677	118025	209451	144081	109810
8000	304189	211689	162328	278974	193438	148046	257619	178084	136074	239301	164988	125893	223415	153687	117130
8500	323201	224920	172473	296410	205528	157299	273720	189214	144579	254257	175300	133762	237378	163292	124451
9000	342213	238150	182619	313846	217618	166552	289821	200345	153083	269213	185612	141630	251341	172898	131772
9500	361225	251381	192764	331282	229708	175804	305922	211475	161588	284169	195924	149499	265305	182503	139092
10000	380237	264612	202909	348717	241798	185057	322024	222605	170092	299126	206235	157367	279268	192108	146413
12000	456284	317534	243491	418461	290157	222069	386428	267126	204111	358951	247483	188840	335122	230530	175695
14000	532332	370456	284073	488204	338517	259080	450833	311647	238129	418776	288730	220314	390975	268952	204978
16000		423379	324655	557948	386876	296092	515238	356168	272148	478601	329977	251787	446829	307373	234261
18000		476301	365237	627691	435236	333103	579642	400689	306166	538426	371224	283260	502683	345795	263543
20000		529223	405819		483595	370115	644047	445210	340185	598252	412471	314734	558536	384217	292826
25000			507274		604494	462643	805059	556513	425231	747814	515589	393417	698171	480271	366032
30000			608728		725393	555172		667816	510277	897377	618706	472101	837805	576325	439239
35000						647701		779118	595324		721824	550784	977439	672379	512445
40000									680370		824942	629467	1117073	768434	585651
45000									765416		928060	708151		864488	658858
50000												786834		960542	732064
55000												865518		1056596	805271
60000												944201		1152650	878477
65000															951684
70000															1024890
75000															1098096

Tightening load (lbs) - imperial system

As a function of the torque (ft.lb.)
of the diameter of the standard bolt from 3 3/4” to 6”
of the bolt friction coefficient

Ø Bolt (in)	3 3/4”			4”			4 1/4”			4 1/2”			4 3/4”		
Nber of threads/inch	4			4			4			4			4		
Width across flats (in)	5 5/8”			6”			6 3/8”			6 3/4”			7 1/8”		
Friction coefficient	0.10	0.15	0.20	0.10	0.15	0.20	0.10	0.15	0.20	0.10	0.15	0.20	0.10	0.15	0.20
Torque (ft.lb)															
5500	144036														
6000	157130														
6500	170224			160248											
7000	183318	125855		172575											
7500	196412	134844		184902			174665								
8000	209506	143834		197228	135169		186310								
8500	222601	152824		209555	143617		197954			187570					
9000	235695	161813	123196	221882	152065		209599			198604					
9500	248789	170803	130040	234209	160513		221243	151392		209637					
10000	261883	179793	136885	246536	168961	128521	232887	159360		220671			209672		
12000	314260	215751	164261	295843	202753	154225	279465	191232		264805	180950		251607		
14000	366636	251710	191638	345150	236545	179929	326042	223104	169568	308939	211108	160335	293541		
16000	419013	287668	219015	394457	270337	205633	372620	254976	193792	353073	241267	183240	335476	228956	
18000	471389	323627	246392	443764	304130	231337	419197	286848	218016	397208	271425	206146	377410	257576	195501
20000	523766	359585	273769	493071	337922	257041	465775	318720	242240	441342	301583	229051	419345	286195	217223
25000	654708	449482	342211	616339	422402	321302	582218	398400	302800	551677	376979	286313	524181	357744	271529
30000	785649	539378	410654	739607	506883	385562	698662	478080	363360	662013	452375	343576	629017	429293	325835
35000	916591	629274	479096	862874	591363	449822	815105	557760	423920	772348	527771	400838	733853	500842	380141
40000	1047532	719171	547538	986142	675843	514083	931549	637440	484480	882684	603167	458101	838689	572391	434446
45000	1178474	809067	615981	1109410	760324	578343	1047993	717120	545040	993019	678563	515364	943525	643940	488752
50000	1309415	898963	684423	1232678	844804	642603	1164436	796800	605600	1103355	753958	572626	1048362	715488	543058
55000		988860	752865	1355945	929285	706864	1280880	876480	666160	1213690	829354	629889	1153198	787037	597364
60000		1078756	821307	1479213	1013765	771124	1397324	956160	726720	1324026	904750	687152	1258034	858586	651670
65000		1168652	889750		1098246	835384	1513767	1035840	787280	1434361	980146	744414	1362870	930135	705975
70000		1258549	958192		1182726	899645	1630211	1115520	847840	1544696	1055542	801677	1467706	1001684	760281
75000			1026634		1267207	963905		1195201	908400	1655032	1130938	858940	1572542	1073233	814587
80000			1095077		1351687	1028165		1274881	968960	1765367	1206333	916202	1677379	1144781	868893
85000			1163519		1436167	1092426		1354561	1029520	1875703	1281729	973465	1782215	1216330	923199
90000			1231961			1156686		1434241	1090080		1357125	1030728	1887051	1287879	977504
95000						1220946		1513921	1150640		1432521	1087990	1991887	1359428	1031810
100000						1285207		1593601	1211200		1507917	1145253	2096723	1430977	1086116

Ø Bolt (in)	5”			5 1/4”			5 1/2”			5 3/4”			6”		
Nber of threads/inch	4			4			4			4			4		
Width across flats (in)	7 1/2”			7 7/8”			8 1/4”			8 5/8”			9”		
Friction coefficient	0.10	0.15	0.20	0.10	0.15	0.20	0.10	0.15	0.20	0.10	0.15	0.20	0.10	0.15	0.20
Torque (ft.lb)															
5500															
6000															
6500															
7000															
7500															
8000															
8500															
9000															
9500															
10000															
12000	239662														
14000	279605			266933											
16000	319549			305066			291839			279711					
18000	359493	245071		343199			328318			314675			302120		
20000	399436	272301		381332	259694		364798	248202		349638			335688		
25000	499295	340377	258197	476665	324618		455998	310253		437048	297106		419611	285028	
30000	599154	408452	309836	571998	389541	295335	547197	372304	282130	524458	356527		503533	342033	
35000	699013	476528	361475	667331	454465	344557	638397	434354	329152	611867	415948	315065	587455	399039	302135
40000	798872	544603	413115	762664	519388	393780	729597	496405	376173	699277	475370	360074	671377	456045	345297
45000	898731	612678	464754	857998	584312	443002	820796	558456	423195	786687	534791	405084	755299	513050	388459
50000	998590	680754	516393	953331	649235	492224	911996	620506	470217	874096	594212	450093	839221	570056	431621
55000	1098449	748829	568033	1048664	714159	541447	1003195	682557	517239	961506	653633	495102	923143	627061	474783
60000	1198308	816904	619672	1143997	779082	590669	1094395	744607	564260	1048915	713054	540112	1007065	684067	517945
65000	1298167	884980	671311	1239330	844006	639892	1185594	806658	611282	1136325	772476	585121	1090987	741072	561107
70000	1398026	953055	722950	1334663	908929	689114	1276794	868709	658304	1223735	831897	630130	1174909	798078	604269
75000	1497885	1021130	774590	1429996	973853	738337	1367994	930759	705325	1311144	891318	675140	1258832	855084	647431
80000	1597744	1089206	826229	1525329	1038776	787559	1459193	992810	752347	1398554	950739	720149	1342754	912089	690593
85000	1697604	1157281	877868	1620662	1103700	836782	1550393	1054861	799369	1485964	1010160	765158	1426676	969095	733756
90000	1797463	1225357	929508	1715995	1168623	886004	1641592	1116911	846390	1573373	1069582	810167	1510598	1026100	776918
95000	1897322	1293432	981147	1811328	1233547	935226	1732792	1178962	893412	1660783	1129003	855177	1594520	1083106	820080
100000	1997181	1361507	1032786	1906661	1298470	984449	1823991	1241012	940434	1748192	1188424	900186	1678442	1140111	863242

Table: Metric System Tension Load (kN)

This table shows the tightening loads to apply to a bolt as a function of bolt diameter and class (mechanical properties) in order to obtain tightening at 80% of its yield point (Re).

Bolt Diameter (mm)	Pitch (mm)	kN load for tightening to 80% of the yield point		
		Class		
		8-8 Yield point = 640 MPa	10-9 Yield point = 900 MPa	12-9 Yield point = 1080 MPa
8	1.25	19	26	32
10	1.5	31	44	53
12	1.75	45	63	76
14	2	64	90	108
16	2	80	113	135
18	2.5	105	147	176
20	2.5	125	176	212
22	2.5	155	218	262
24	3	180	254	305
27	3	235	331	397
30	3.5	297	418	502
33	3.5	355	499	599
36	4	418	588	706
39	4	500	703	843
42	4.5	574	807	968
45	4.5	669	940	1128
48	5	754	1061	1273
52	5	900	1266	1519
56	5.5	1039	1462	1754
60	5.5	1209	1701	2041
64	6	1370	1927	2312
68	6	1564	2200	2640
72	6	1771	2491	2989
76	6	1991	2800	3360
80	6	2224	3128	3753
85	6	2533	3562	4275
90	6	2862	4025	4830
95	6	3212	4517	5420
100	6	3581	5036	6043
110	6	4380	6160	7392
120	6	5260	7397	8876
125	6	5730	8058	9669
130	6	6220	8747	10496
140	6	7261	10210	12252
150	6	8381	11786	14144

Example: One M39 class 10-9 bolt can be tightened with a residual tightening load of 703 kN to provide an initial tightening load corresponding to 80% of the bolt's yield point.

Table: Imperial System Tension Load (lbs)

Bolt Diameter		Number of threads* per inch	Pound load for tightening to 80% of the yield point		
			Class		
(in)	(mm)		8-8 Yield point = 95000 psi	10-9 Yield point = 130000 psi	12-9 Yield point = 155000 psi
5/16”	7.94	18	4047	5538	6603
3/8”	9.53	16	5974	8176	9748
7/16”	11.11	14	8194	11212	13368
1/2”	12.70	13	10926	14952	17827
9/16”	14.29	12	14002	19160	22845
5/8”	15.88	11	17388	23794	28370
3/4”	19.05	10	25702	35171	41935
7/8”	22.23	9	35462	48526	57858
1”	25.40	8	46513	63650	75890
1 1/8”	28.58	7	58620	80217	95643
1 1/4”	31.75	7	74341	101730	121294
1 3/8”	34.93	6	88648	121308	144637
1 1/2”	38.10	6	107767	147470	175830
1 3/4”	44.45	5	145709	199391	237736
2”	50.80	4 1/2	191586	262170	312587
2 1/4”	57.15	4 1/2	248786	340444	405915
2 1/2”	63.50	4	306360	419230	499851
2 3/4”	69.85	4	377706	516861	616257
3”	76.20	4	456514	624703	744838
3 1/4”	82.55	4	542783	742756	885593
3 1/2”	88.90	4	636514	871019	1038522
3 3/4”	95.25	4	737706	1009492	1203625
4”	101.60	4	846360	1158176	1380903
4 1/4”	107.95	4	962475	1317071	1570354
4 1/2”	114.30	4	1086052	1486176	1771979
4 3/4”	120.65	4	1217090	1665492	1985779
5”	127.00	4	1355590	1855018	2211753
5 1/4”	133.35	4	1501552	2054755	2449900
5 1/2”	139.70	4	1654975	2264702	2700222
5 3/4”	146.05	4	1815859	2484860	2962718
6”	152.40	4	1984205	2715229	3237388

Example: One 1 1/2” class 10-9 bolt can be tightened with a residual tightening load of 147470 lbs to provide an initial tightening load corresponding to 80% of the bolt’s yield point.

* Coarse thread series UNC/UNRC



Standard product range

In its standard range of hydraulic tensioners, SKF Equipements offers no less than 6 different types of tensioners with characteristics which are both different and complementary.

The product range includes multi-purpose, powerful, thin, compact and other types of tensioners, covering a wide range of bolt dimensions from M8 to M160 (5/16” to 6”), and able to apply pre-tightening loads ranging from 50 kN to 8500 kN.



Tensioner dimension has been carefully designed to allow use in the widest range of situations.

The product range has improved and extended over the years, benefiting from SKF Equipements’ extensive experience in the hydraulic tightening field. Experience gained from responding to customer demand has also contributed to enriching the product range.

This range should therefore meet your tensioner and accessory needs. If however this were not the case, SKF Equipements also makes customized tensioners (adapting standard tensioner parts to your application) and special tensioners (new design of dedicated tensioners).

Specially designed tensioners have enabled us to increase the range of sizes of bolts tightened, covering M5 to M500 (3/16” to 20”).

Generally speaking, it is more economical to plan the use of the tensioner from the assembly design stage, and to try to use standard equipment.

This provides significant savings in the cost of tightening bolted assemblies.

Hydraulic force diagrams for standard tensioners

These hydraulic force diagrams help define the type(s) of tensioners which best suit your application, depending on the size of the bolt and the traction load to apply. In addition, you must verify the other characteristics with respect to your operational constraints (space, weight, time…).

HTA



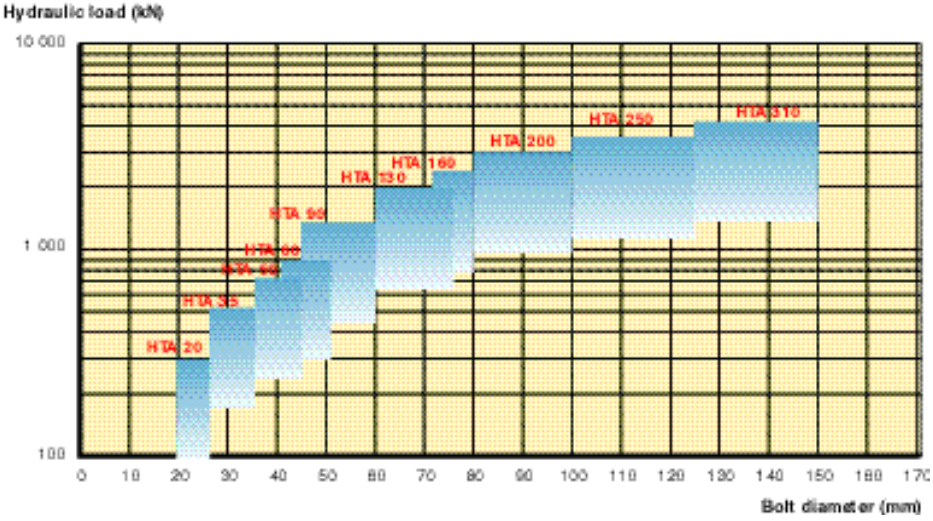

HTS



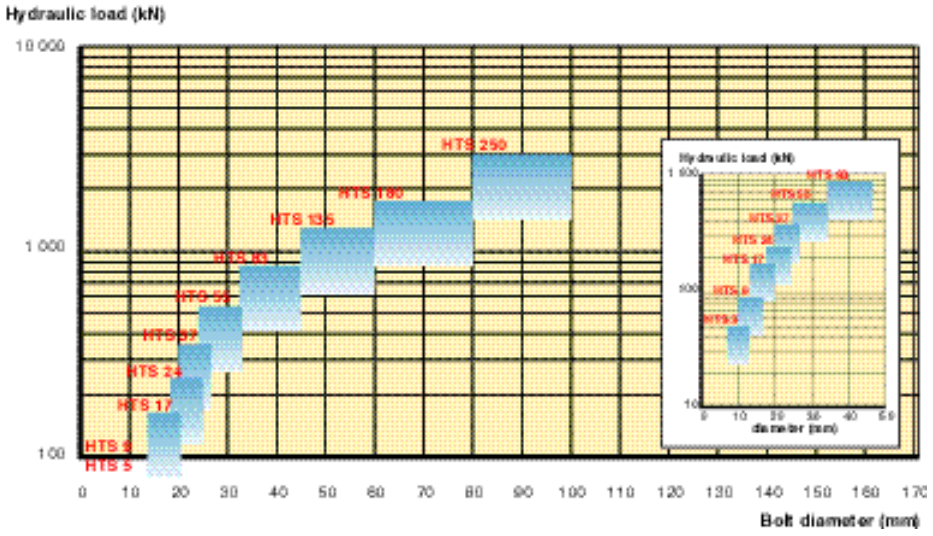

HTS N



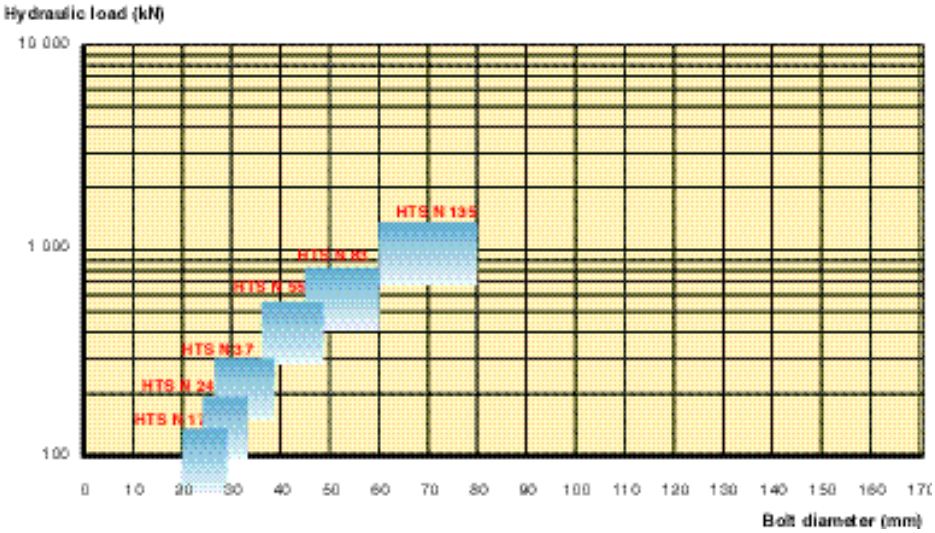

HTS2



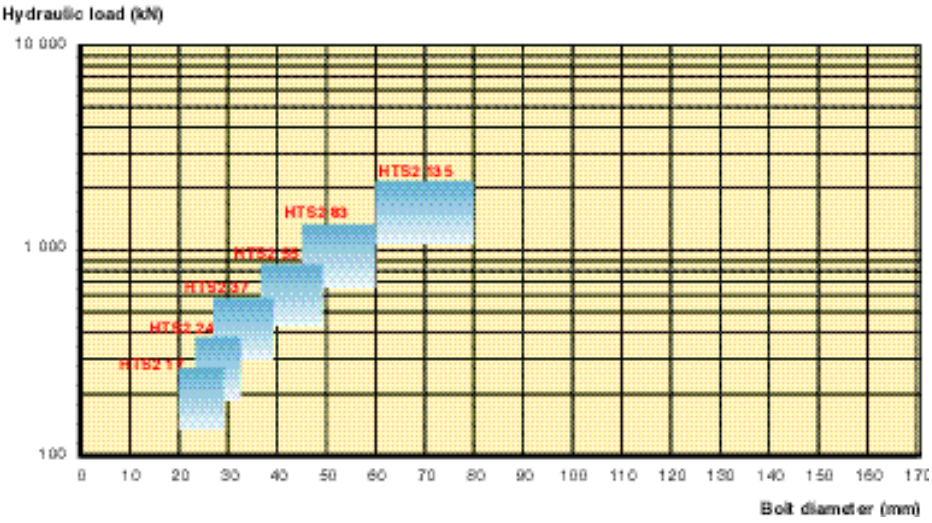

HTC R



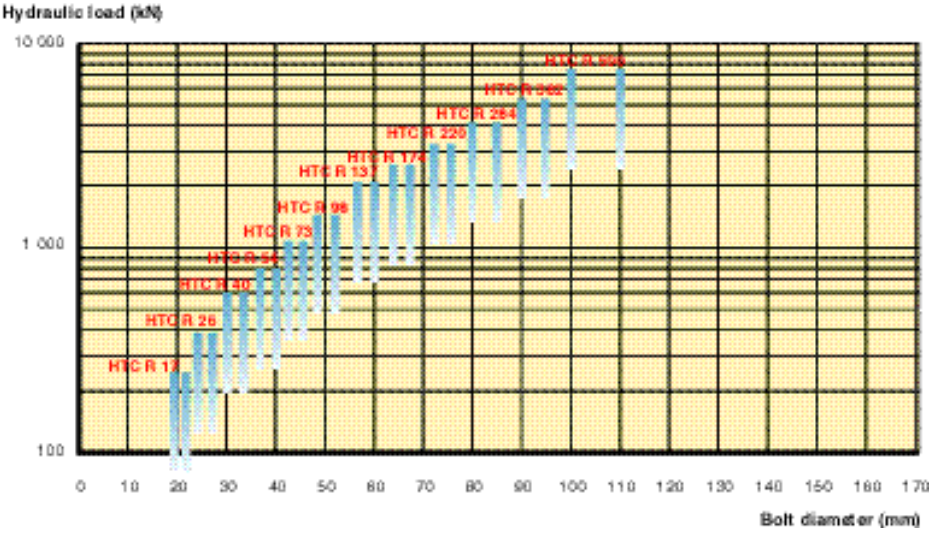

HTH R



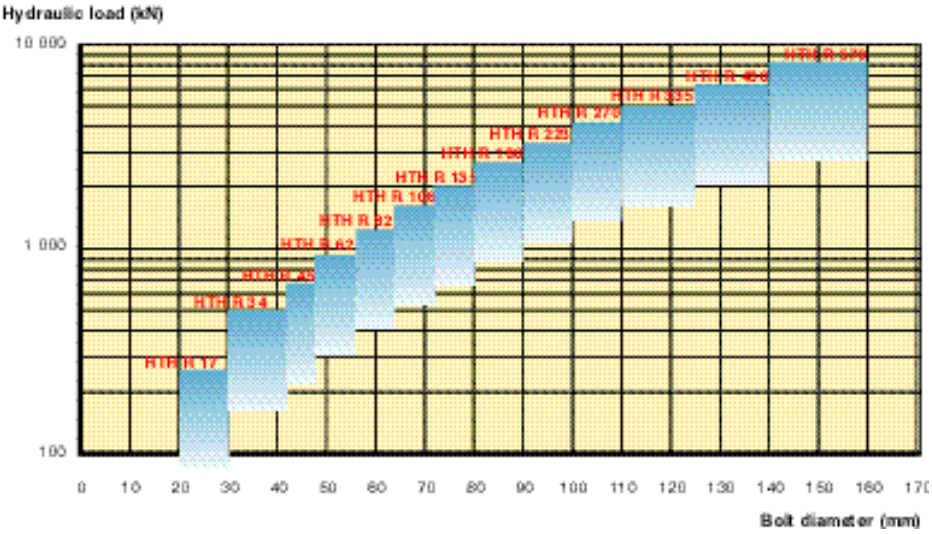

Summary Table: Standard Tensioner

This table summarizes the main features of each tensioner, in order to help you select the standard tensioner for your operational requirements.







	HTA	HTS	HTS N
Tightens several diameters [1]	Yes	Yes	Yes
Diameters of the bolts tightened	Small and large	Small and very small	Small
Space occupied by the tensioner	Normal	Small	Little
Tightening load	High	High	Average
Stroke arresting device	Optional	Optional	Optional
Automatic return	No	Optional	Optional
Cost index [2]	100 (base)	140	160
Special Feature	Adaptable	Very small bolt diameters	The same tensioner can tighten several diameters
Catalogue page	34 - 35	36 - 37	38 - 39

[1] by changing the brace
[2] indicative, also takes into account the loads applied

Characteristics



HTS 2



HTC R



HTH R

HTS 2	HTC R	HTH R
Yes	No	Yes
Small and average	Small and large	Large and very large
Very little	Compact	Very little
High	Very high	Very high
Optional	Yes	Yes
Optional	Yes	Yes
200	180	250
Fits in very narrow spaces	Compact and powerful	Takes up very little space and very powerful
40 - 41	42 - 43	44 - 45

HTA

Multi-purpose

The dimensions and the traction load suit this tensioner to many different applications.



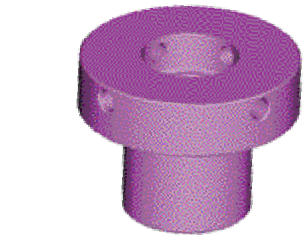

HTA..T..

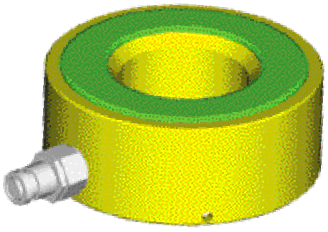

HTA..C

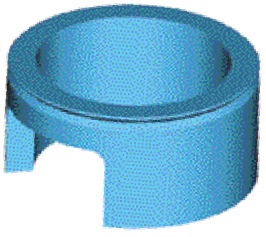

HTA..J



optional

Reference example for a complete tensioner for M48 bolts:

HTA 90 M48 x 5

Reference example for the M48 x 5 brace for the HTA 90 tensioner:

HTA 90T M48 x 5

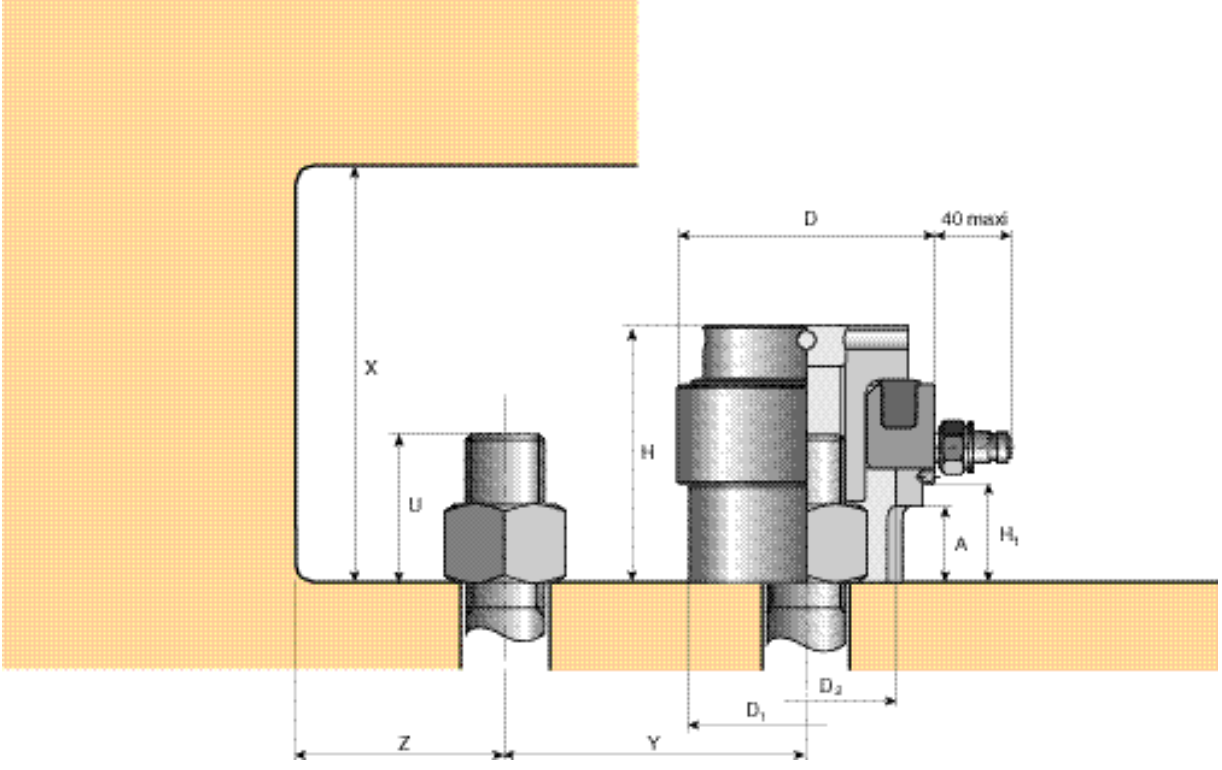

HTA

Multi-purpose

Tensioner reference		HTA 20	HTA 35	HTA 50	HTA 60	HTA 90	HTA 130	HTA 160	HTA 200	HTA 250	HTA 310
Bolt dimension (M Ø x pitch)	Metric system	M 20 x 2.5 M 22 x 2.5 M 24 x 3 M 27 x 3	M 27 x 3 M 30 x 3.5 M 33 x 3.5 M 36 x 4	M 36 x 4 M 39 x 4 M 42 x 4.5 M 45 x 4.5	M 42 x 4.5 M 45 x 4.5 M 48 x 5 M 52 x 5	M 45 x 4.5 M 48 x 5 M 52 x 5 M 56 x 5.5 M 60 x 5.5	M 60 x 5.5 M 64 x 6 M 68 x 6 M 72 x 6 M 76 x 6	M 72 x 6 M 76 x 6 M 80 x 6	M 80 x 6 M 85 x 6 M 90 x 6 M 95 x 6 M 100 x 6	M 100 x 6 M 110 x 6 M 120 x 6 M 125 x 6	M 125 x 6 M 130 x 6 M 140 x 6 M 150 x 6
Ø in - Threads/in	Imperial system	3/4" - 10 7/8" - 9 1" - 8	1" - 8 1 1/8" - 7 1 1/4" - 7 1 3/4" - 6	1 3/8" - 6 1 1/2" - 6 1 3/4" - 5	1 1/2" - 6 1 3/4" - 5 2" - 4 1/2	1 3/4" - 5 2" - 4 1/2 2 1/4" - 4 1/2	2 1/2" - 4 2 3/4" - 4 3" - 4	2 3/4" - 4 3" - 4 3 1/4" - 4	3 1/4" - 4 3 1/2" - 4 3 3/4" - 4	3 3/4" - 4 4" - 4 4 1/4" - 4 4 1/2" - 4 4 3/4" - 4	5" - 4 5 1/4" - 4 5 1/2" - 4 5 3/4" - 4
Max. Pressure	(MPa) (psi)	150 21756	150 21756	150 21756	150 21756	150 21756	150 21756	150 21756	150 21756	150 21756	150 21756
Hydraulic area	(cm^2) (in^2)	20 3.10	35 5.43	50 7.75	60 9.30	90 13.95	130 20.15	160 24.80	200 31.00	250 38.75	310 48.05
Max. hydraulic load	(kN) (lbf)	300 67443	525 118025	750 168606	900 202328	1 350 303492	1 950 438377	2 400 539541	3 000 674426	3 750 843032	4 650 1045360
Piston stroke (mm)		8	8	8	8	8	8	10	10	10	10
D (mm)		86	109	128	137	166	198	215	244	284	325
H (mm)		100	116	128	140	154	179	190	217	245	273
H1 (mm)		30	40	49	54	65	82	86	106	131	156
D1 (mm)		74	97	116	133	154	187	203	232	272	313
D2 (mm)		56	73	90	102	114	137	145	180	223	260
A (mm)		26	31	38	40	42	50	50	60	73	86
U (mm)		38 42 46 52	52 57 63 69	69 74 80 86	80 86 92 99	86 92 99 107 114	114 122 130 137 145	137 145 152	152 162 171 181 190	190 209 228 238	238 247 266 285
X (mm)		138 142 146 152	168 173 179 185	197 202 208 214	220 226 232 239	240 246 253 261 268	293 301 309 316 324	327 335 342	355 365 374 384 393	425 444 463 473	506 515 534 553
Y (mm)		56 57 59 62	73.5 76.5 79 81	91 94 97 100	91 92 94 96	119 122 124.5 127.5 130.5	147 150 153 155.5 158.5	163.5 166.5 169.5	184.5 187.5 193 196 202	222 227.5 236 242	262.5 265 274 280
Z (mm)		44.5	56	65.5	69.5	84.5	101	109	124	144	164.5
Total tensioner weight (kg)		3	4.8	7.5	9	15.3	25	31	39	54	75

HTS

Small

The HTS tensioner is specially designed to tighten small bolts (starting with M8).

However, it can also tighten large bolts. Its design also tolerates possible geometric faults in the assembly parts.





HTS..T..

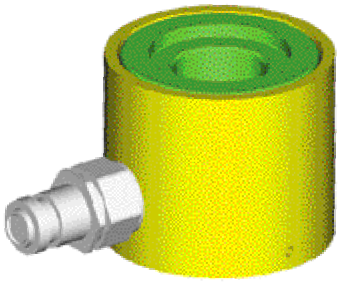

HTS..C

Reference example
for a complete tensioner
for M12 bolts:

HTS 9 M12 x 1.75

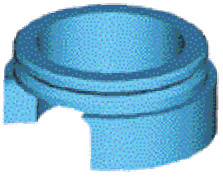

HTS..J

Reference example
for the M48 x 5 body
for the HTS 9 C tensioner:

HTS 9 C



optional

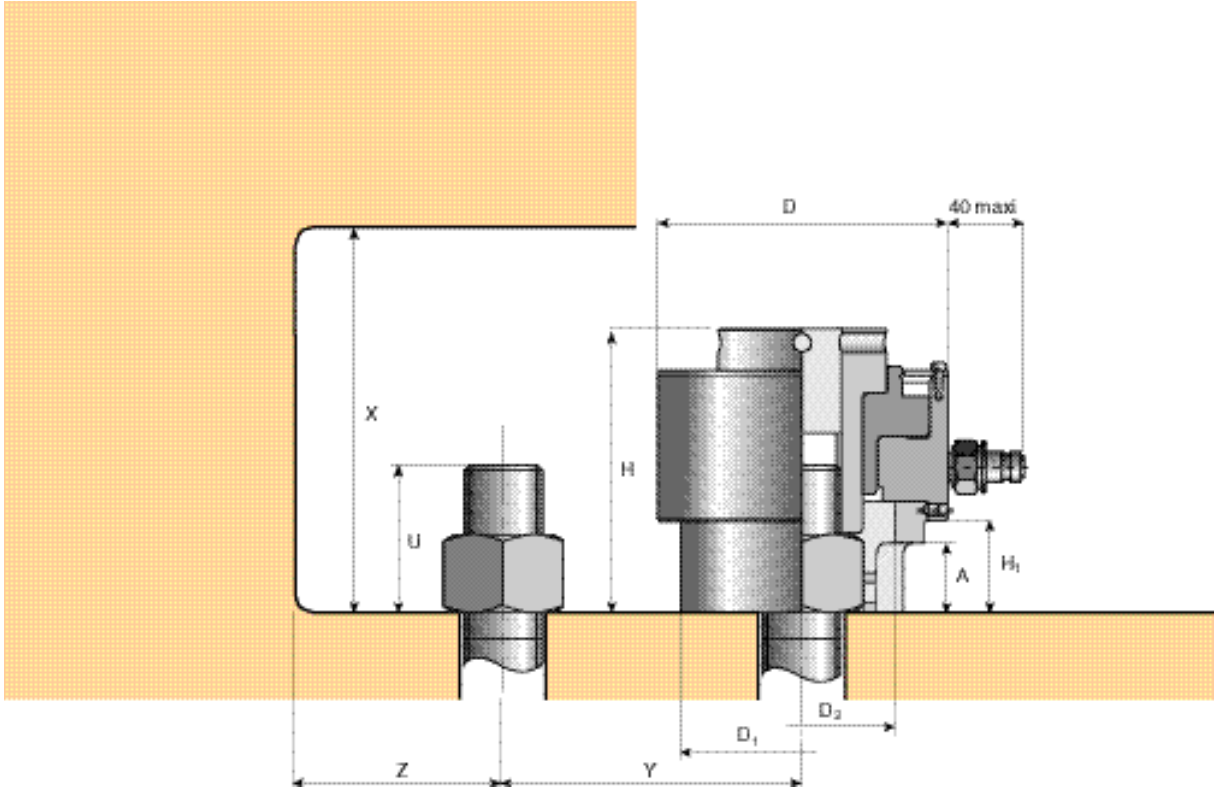

HTS

Small

Tensioner reference		HTS 5	HTS 9	HTS 17	HTS 24	HTS 37	HTS 55	HTS 83	HTS 135	HTS 180	HTS 250
Bolt dimension (M Ø x pitch)	Metric system	M 8 x 1.25 M 10 x 1.5 M 12 x 1.75	M 10 x 1.5 M 12 x 1.75 M 14 x 2 M 16 x 2	M 14 x2 M 16 x 2 M 18 x 2.5 M 20 x 2.5	M 18 x 2.5 M 20 x 2.5 M 22 x 2.5 M 24 x 3	M 20 x 2.5 M 22 x 2.5 M 24 x 3 M 27 x 3	M 24 x 3 M 27 x 3 M 30 x 3.5 M 33 x 3.5	M 33 x 3.5 M 36 x 4 M 39 x 4 M 42 x 4.5 M 45 x 4.5	M 45 x 4.5 M 48 x 5 M 52 x 5 M 56 x 5.5	M 56 x 5.5 M 60 x 5.5 M 64 x 6 M 68 x 6 M 72 x 6 M 76 x 6 M 80 x 6	M 80 x 6 M 85 x 6 M 90 x 6 M 95 x 6 M 100 x 6
Ø in - Threads/in	Imperial system	5/16" - 18 3/8" - 16 7/16" - 14	3/8" - 16 7/6" - 14 1/2" - 13 9/16" - 12 5/8" - 11	9/16" - 12 5/8" - 11 3/4" - 10	3/4" - 10 7/8" - 9 1" - 8	7/8" - 9 1" - 8 1 1/8" - 7	1" - 8 1 1/8" - 7 1 1/4" - 7	1 1/4" - 7 1 3/8" - 6 1 1/2" - 6 1 3/4" - 5	1 3/4" - 5 2" - 4 1/2 2 1/4"-4 1/2	2 1/4"-4 1/2 2 1/2" - 4 2 3/4" - 4 3" - 4	3" - 4 3 1/4" - 4 3 1/2" - 4 3 3/4" - 4
Max. Pressure	(MPa) (psi)	100 14504	100 14504	100 14504	100 14504	100 14504	100 14504	100 14504	100 14504	100 14504	120 17405
Hydraulic area	(cm^2) (in^2)	5 0.78	9 1.40	17 2.64	24 3.72	37 5.74	55 8.53	83 12.87	135 20.93	180 27.90	250 38.75
Max. hydraulic load	(kN) (lbf)	50 11240	90 20233	170 38217	240 53954	370 83179	550 123645	830 186591	1 350 303492	1 800 404655	3 000 674426
Piston stroke (mm)		5	6	6	6	6	7	8	8	15	15
D (mm)		51	60	65	80	97	114	145	180	250	285
H (mm)		58	68	85	95	95	111	142	200	265	310
H1 (mm)		14.5	17.5	16	20	20	26	46	75	95	140
D1 (mm)		40	48	60	64	84	98	122	155	220	250
D2 (mm)		28.5	35	42	52	60	72	92	117	156	194
A (mm)		14.5	17	16	14	18	24	35	40	55	47
U (mm)		16 20 23	20 23 27 31	27 31 35 38	35 38 42 46	38 42 46 52	46 52 57 63	63 69 74 80 86	86 92 99 107	107 114 122 130 137 145 152	152 162 171 181 190
X (mm)		74 78 81	88 91 95 99	112 116 120 123	130 133 137 141	133 137 141 149	157 163 168 174	205 211 216 222 228	286 292 299 307	372 379 387 395 402 410 417	462 472 481 491 500
Y (mm)		33	39.5	46.5 48 49.5 51.5	56.5 58.5 59.5 62	67.5 68.5 71 73.5	79 81.5 84.5 87	91.5 94.5 97 100 103	119.5 122.5 125 128	160.5 163.5 166.5 169 172 175 178	193 196 201.5 204.5 210
Z (mm)		23.5	28.5	34	41	50	58	74	92	127	144
Total tensioner weight (kg)		0.5	1	1.7	2.4	3.7	5.3	10.4	27	62	91

HTS N

Thin

This tensioner is designed to fit into narrow spaces. It is also used when bolts are spaced close together.

It particularly suits tightening big bolts with low traction load.



Tensioner component reference



HTS 2..ES

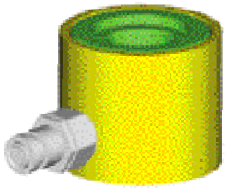

HTS..C



HTS N..T..



HTS 2..J



optional

Reference example for a complete tensioner for 1 1/8” - 7 bolts:

HTS N 24 1 1/8” - 7

Reference example for the 1 1/8” - 7 brace of the HTS N 24 tensioner:

HTS N 24 T 1 1/8” - 7

HTS N

Thin

Tensioner reference		HTS N 17	HTS N 24	HTS N 37	HTS N 55	HTS N 83	HTSN 135
Bolt dimension (M Ø x pitch)	Metric system	M 20 x 2.5 M 22 x 2.5 M 24 x 3 M 27 x 3	M 24 x 3 M 27 x 3 M 30 x 3.5 M 33 x 3.5	M 27 x 3 M 30 x 3.5 M 33 x 3.5 M 36 x 4 M 39 x 4	M 36 x 4 M 39 x 4 M 42 x 4.5 M 45 x 4.5 M 48 x 5	M 45 x 4.5 M 48 x 5 M 52 x 5 M 56 x 5.5 M 60 x 5.5	M 60 x 5.5 M 64 x 6 M 68 x 6 M 72 x 6 M 76 x 6 M 80 x 6
Ø in - Threads/in	Imperial system	3/4" - 10 7/9" - 9 1" - 8	7/8" - 9 1" - 8 1 1/8" - 7 1 1/4" - 7	1 1/8" - 7 1 1/4" - 7 1 3/8" - 6 1 1/2" - 6	1 3/8" - 6 1 1/2" - 6 1 3/4" - 5	1 3/4" - 5 2" - 4 1/2 2 1/4"-4 1/2	2 1/4"-4 1/2 2 1/2" - 4 2 3/4" - 4 3" - 4
Max. Pressure	(MPa) (psi)	80 11603	80 11603	80 11603	100 14504	100 14504	100 14504
Hydraulic area	(cm^2) (in^2)	17 2.64	24 3.72	37 5.74	55 8.53	83 12.87	135 20.93
Max. hydraulic load	(kN) (lbf)	136 30574	192 43163	296 66543	550 123645	830 186591	1 350 303492
Piston stroke (mm)		6	6	6	7	8	8
D (mm)		65	80	97	114	145	180
H (mm)		161	177	206	233	286	390
H1 (mm)		75	78	95	115	145	200
D1 (mm)		65	80	97	114	145	180
D2 (mm)		53	66	76	95	120	152
A (mm)		20	20	25	25	30	50
U (mm)		38 42 46 52	46 52 57 63	52 57 63 69 74	69 74 78 86 92	86 92 99 107 114	114 122 133 137 145 152
X (mm)		199 203 207 213	223 229 234 240	258 263 269 275 280	302 307 311 319 325	372 378 385 393 400	504 512 520 527 535 542
Y (mm)		51.5 52 55 57.5	62 65 68 70.5	73.5 76.5 79 81.5 84.5	90 93 96 99 102	114.5 117.5 120 123 126	143.5 146.5 149 152 155 158
Z (mm)		34	41	50	58	74	92
Total tensioner weight (kg)		3	4.6	7.6	11.6	20	50

HTS 2

Thin and powerful

Like the HTS N Tensioner, HTS 2 takes up very little space.

Due to its two-story design, there is greater tightening load for a given diameter as compared with HTS or HTS N.



Reference example for a complete tensioner for M36 bolts:

HTS 2 37 M36 x 4

Reference example for the HTS 2 37 tensioner upper screw:

HTS 2 37 ES

Tensioner component reference

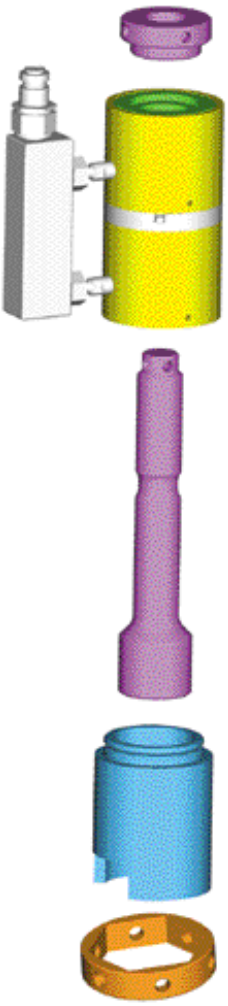

HTS 2..ES

HTS 2..C

HTS 2..T

HTS 2..J

optional

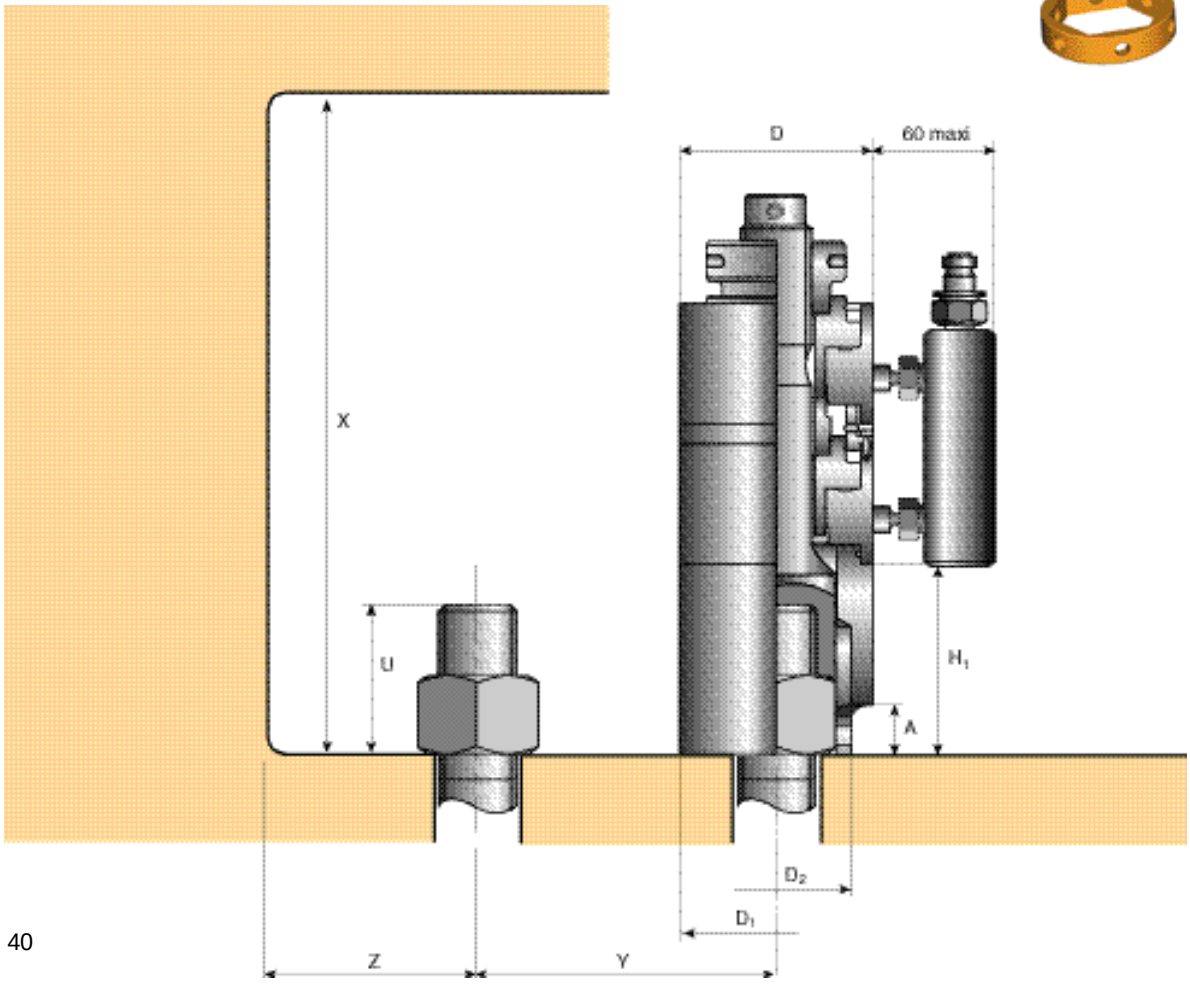

HTS 2

Thin and powerful

Tensioner reference		HTS2 17	HTS2 24	HTS2 37	HTS2 55	HTS2 83	HTS2 135
Bolt dimension (M Ø x pitch)	Metric system	M 20 x 2.5 M 22 x 2.5 M 24 x 3 M 27 x 3	M 24 x 3 M 27 x 3 M 30 x 3.5 M 33 x 3.5	M 27 x 3 M 30 x 3.5 M 33 x 3.5 M 36 x 4 M 39 x 4	M 36 x 4 M 39 x 4 M 42 x 4.5 M 45 x 4.5 M 48 x 5	M 45 x 4.5 M 48 x 5 M 52 x 5 M 56 x 5.5 M 60 x 5.5	M 60 x 5.5 M 64 x 6 M 68 x 6 M 72 x 6 M 76 x 6 M 80 x 6
Ø in - Threads/in	Imperial system	3/4" - 10 7/8" - 9 1" - 8	7/8" - 9 1" - 8 1 1/8" - 7 1 1/4" - 7	1 1/8" - 7 1 1/4" - 7 1 3/8" - 6 1 1/2" - 6	1 3/8" - 6 1 1/2" - 6 1 3/4" - 5	1 3/4" - 5 2" - 4 1/2 2 1/4"-4 1/2	2 1/4"-4 1/2 2 1/2" - 4 2 3/4" - 4 3" - 4
Max. Pressure	(MPa) (psi)	80 11603	80 11603	80 11603	80 11603	80 11603	80 11603
Hydraulic area	(cm^2) (in^2)	34 2.64	48 3.72	74 5.74	110 8.53	166 12.87	270 20.93
Max. hydraulic load	(kN) (lbf)	272 30574	384 43163	592 66543	880 98916	1 328 149273	2 160 242793
Piston stroke (mm)		6	6	6	7	8	8
D (mm)		65	80	97	114	145	180
H (mm)		228	245	277	312	363	500
H1 (mm)		75	78	95	115	145	200
D1 (mm)		65	80	97	114	145	180
D2 (mm)		53	66	76	95	120	152
A (mm)		20	20	25	25	30	50
U (mm)		38 42 46 52	46 52 57 63	52 57 63 69 74	69 74 80 86 92	86 92 99 107 114	114 122 130 137 145 152
X (mm)		266 270 274 280	291 297 302 308	329 334 340 346 351	381 386 392 398 404	449 455 442 470 477	614 622 630 637 645 652
Y (mm)		51.5 52.5 55 57.5	62 65 68 70.5	73.5 76.5 79 81.5 84.5	90 93 96 99 102	114.5 117.5 120 123 126	143.5 146.5 149 152 155 158
Z (mm)		34	41	50	58	74	92
Total tensioner weight (kg)		4.8	7.6	11.4	16.9	30	66

HTC R

Compact and powerful

HTC R, the most powerful tensioner in the Hydrocam standard range, can apply very high traction loads.

The brace and the body are monolithic. The HTC R tensioner, with its automatic piston return and few parts, is very easy to use and well-suited to simultaneous tightening.

Each unit is dedicated to a single bolt diameter

Tensioner component reference



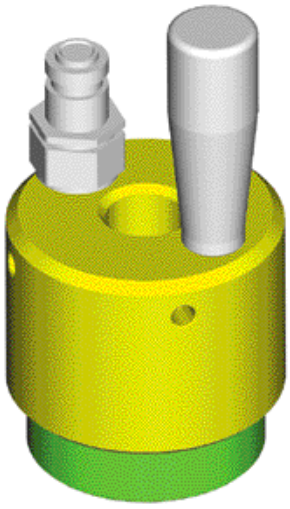

HTC R..C..



HTCR..J

Reference example
for a complete tensioner
for 2 1/2” - 4 bolt:

HTC R 137 2 1/2” - 4



optional

Reference example
for the HTC R 137 tensioner
body for a 2 1/2” - 4 bolt:

HTC R 137 C 2 1/2” - 4

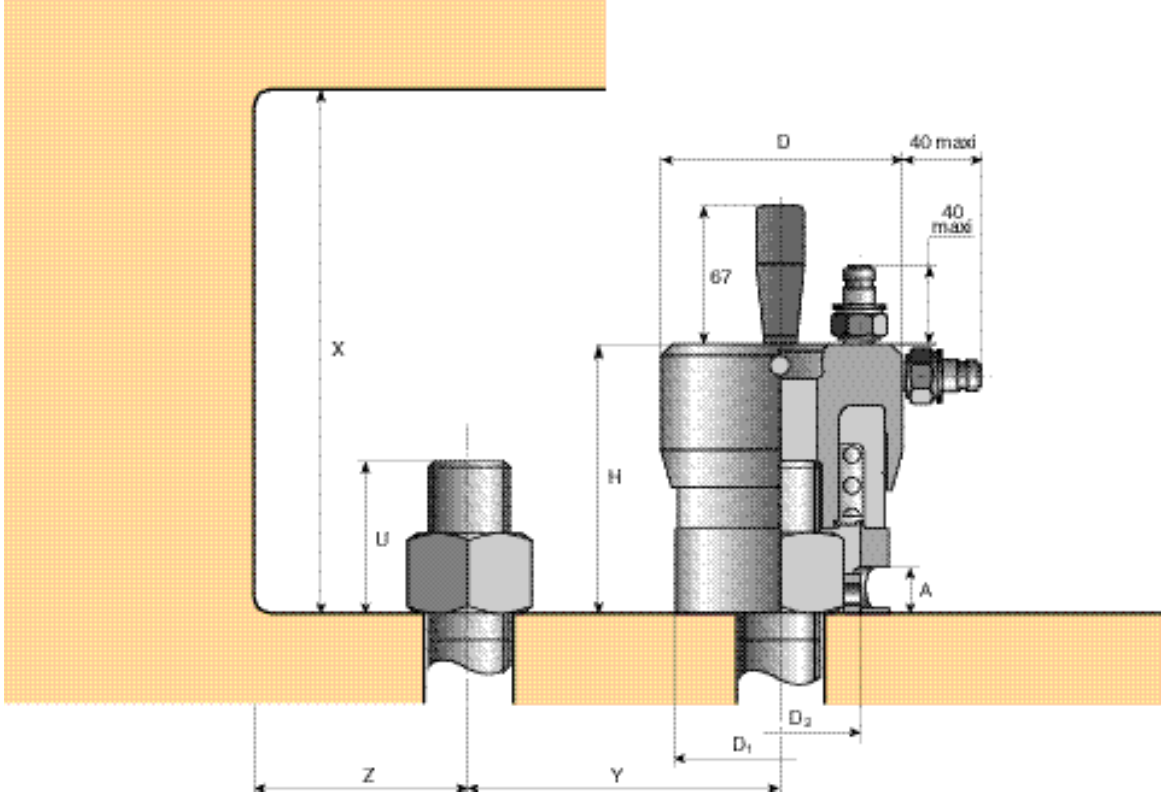

HTC R

Compact and powerful

Tensioner reference		HTC R 17	HTC R 26	HTC R 40	HTC R 54	HTC R 73	HTC R 98	HTC R 137	HTC R 174	HTC R 220	HTC R 284	HTC R 362	HTC R 500
Bolt dimension (M Ø x pitch)	Metric system	M 20 x 2.5 M 22 x 2.5	M 24 x 3 M 27 x 3	M 30 x 3.5 M 33 x 3.5	M 36 x 4 M 39 x 4	M 42 x 4.5 M 45 x 4.5	M 48 x 5 M 52 x 5	M 56 x 5.5 M 60 x 5.5	M 64 x 6 M 68 x 6	M 72 x 6 M 76 x 6	M 80 x 6 M 85 x 6	M 90 x 6 M 95 x 6	M 100 x 6 M 110 x 6
Ø in - Threads/in	Imperial system	3/4" - 10 7/8" - 9	1" - 8 1 1/8" - 7	1 1/8" - 7 1 1/4" - 7	1 3/8" - 6 1 1/2" - 6	1 3/8" - 6 1 1/2" - 6	1 3/4" - 5 2" - 4 1/2	2 1/4"-4 1/2 2 1/2" - 4	2 1/2" - 4 2 3/4" - 4	2 3/4" - 4 3" - 4	3 1/4" - 4 3 1/2" - 4	3 1/2" - 4 3 3/4" - 4	4" - 4 4 1/4" - 4
Max. Pressure	(MPa) (psi)	150 21756	150 21756	150 21756	150 21756	150 21756	150 21756	150 21756	150 21756	150 21756	150 21756	150 21756	150 21756
Hydraulic area	(cm^2) (in^2)	17 2.64	26 4.03	40 6.20	54 8.37	73 11.32	98 15.19	137 21.24	174 26.97	220 34.10	284 44.02	362 56.11	500 77.50
Max. hydraulic load	(kN) (lbf)	255 57326	390 87675	600 134885	810 182095	1 095 146165	1 470 330469	2 055 461982	2 610 586750	3 300 741868	4 260 957685	5 430 1220711	7 500 1686064
Piston stroke (mm)		8	8	8	8	8	8	8	10	10	10	10	10
D (mm)		71	83	103	117	134	154	183	204	227	255	287	335
H (mm)		93	103	116.5	130	144	159.5	195	225	241	225	240	260
H1 (mm)		41	47	52.5	60.5	68.5	72.5	90	108	114	87	98	113
D1 (mm)		60.5	73	90	103	120	138	160	178	194	217	244	283
D2 (mm)		45.5	54	67	76,5	89.5	102	116	127	136	151	168	192
A (mm)		14	17	20	23	26	29	32	37	42	47	51	56
U (mm)		38 42	46 52	57 63	69 74	80 86	92 99	107 114	122 130	137 145	152 162	171 181	190 209
X (mm)		111.5	126	145	163.5	183	204	247	285	308	300	323	356
Y (mm)		50	61.5	75.5	87.6	102	116.5	133.5	148	162	179.5	202	233
Z (mm)		37	43	53	60	68.5	78.5	93	103.5	115	129	145.5	169.5
Total tensioner weight (kg)		2	3	4.5	6.2	9.5	15	24.2	34	45.5	49	65	99

HTH R

Thin and super-powerful

This full-option tensioner provides maximum power for a minimum of space.

Built on two or three stories (depending on the diameters to be tightened), this is the thinnest tensioner in the Hydrocam standard product range.

In most cases, it requires the use of cylindrical nuts.

The HTH R also has an automatic piston return mechanism and is very well-suited to simultaneous tightening.



Reference example for a complete tensioner for M72 bolts:

HTH R 108 M72 x 6

Reference example for the HTH R 108 tensioner skirt:

HTH R 108 J

Tensioner component reference



HTH R..ES

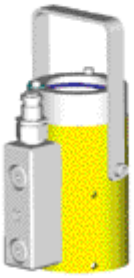

HTH R..C



HTH R..T..



HTH R..J



Accessory

HTH R

Thin and super-powerful

Tensioner reference		HTH R 17	HTH R 34	HTH R 45	HTHR 62	HTH R 82	HTH R 108	HTH R 135	HTH R 180	HTH R 223	HTH R 270	HTH R 335	HTH R 427	HTH R 567
Bolt dimension (M Ø x pitch)	Metric system	M 20 x 2.5 M 22 x 2.5 M 24 x 3 M 27 x 3 M 30 x 3.5	M 30 x 3.5 M 33 x 3.5 M 36 x 4 M 39 x 4 M 42 x 4.5	M 42 x 4.5 M 45 x 4.5 M 48 x 5	M 48 x 5 M 52 x 5 M 56 x 5.5	M 56 x 5.5 M 60 x 5.5 M 64 x 6	M 64 x 6 M 68 x 6 M 72 x 6	M 72 x 6 M 76 x 6 M 80 x 6	M 80 x 6 M 85 x 6 M 90 x 6	M 90 x 6 M 95 x 6 M 100 x 6	M 100 x 6 M 110 x 6	M 110 x 6 M 120 x 6 M 125 x 6	M 125 x 6 M 130 x 6 M 140 x 6	M 140 x 6 M 150 x 6 M 160 x 6
Ø in - Threads/in	Imperial system	3/4" - 10 7/8" - 9 1" - 8 1 1/8" - 7	1 1/4" - 7 1 3/8" - 6 1 1/2" - 6	1 1/2" - 6 1 3/4" - 5	1 3/4" - 5 2" - 4 1/2	2 1/4"-4 1/2 2 1/2" - 4	2 1/2" - 4 2 3/4" - 4	2 3/4" - 4 3" - 4	3 1/4" - 4 3 1/2" - 4	3 1/2" - 4 3 3/4" - 4	3 3/4" - 4 4" - 4 4 1/4" - 4	4 1/2" - 4 4 3/4" - 4	5" 5 1/4" - 4 5 1/2" - 4	5 1/2" - 4 5 3/4" - 4 6"
Max. Pressure	(MPa) (psi)	150 21756	150 21756	150 21756	150 21756	150 21756	150 21756	150 21756	150 21756	150 21756	150 21756	150 21756	150 21756	150 21756
Hydraulic area	(cm^2) (in^2)	17 2.64	34 5.27	45 6.98	62 9.61	82 12.71	108 16.74	135 20.93	180 27.90	223 34.57	270 41.85	335 51.93	427 66.19	567 87.89
Max. hydraulic load	(kN) (lbf)	255 57326	510 114652	675 151746	930 209072	1 230 276515	1 620 364190	2 025 455237	2 700 606983	3 345 751985	4 050 910475	5 025 1129663	6 405 1439899	8 505 1911997
Piston stroke (mm)		8	10	10	10	10	10	10	10	10	10	10	10	10
D (mm)		63	73	84	100	110	122	136	147	160	180	200	223	255
H (mm)		180	270	290	315	334	420	460	510	560	585	635	695	770
H1 (mm)		60	41	45	50	61	144	155	171	185				
D1 (mm)		62	70	81	96	108	118	134	144	157	175	200	223	255
D2 (mm)		45	61	68	81	90	101	112	124	138	152	171	190	217
U (mm)		50 55 60 68 73	73 77 84 91 98	98 101 107	107 109 117	117 122 132	132 137 145	144 152 160	160 166 176	176 181 190	190 208	208 236 245	245 251 270	270 290 310
X mini (mm)		230 235 240 248 253	343 347 354 361 368	388 391 397	422 424 432	451 456 466	552 557 565	604 612 620	670 676 686	736 741 750	775 793	843 871 880	940 946 965	1 040 1 060 1 080
Y mini (mm)		55	68	77	91	101	112	125	137	151	168	187.5	208.5	238
Z mini (mm)		33	38	43.5	51.5	56.5	62.5	68.5	75	82	92	102	113.5	129.5
Total tensioner weight (kg)		3.5	7	10	14	16	25	36	47	59	79	90	150	220

Customized standard tensioners

Do you have a specific assembly ? SKF Equipements adapts the tensioner to your application.

A Hydrocam standard tensioner has been selected for your application… but there may be one feature of your bolted assembly which prevents the tensioner from being used.

SKF Equipements can easily adapt the following components of the tensioner to fit your size and accessibility constraints:
- the brace
- the skirt
- the socket
- the reaction nut

The examples of customized parts shown below portray only a small portion of what can be done – the possibilities are endless.

Customized braces

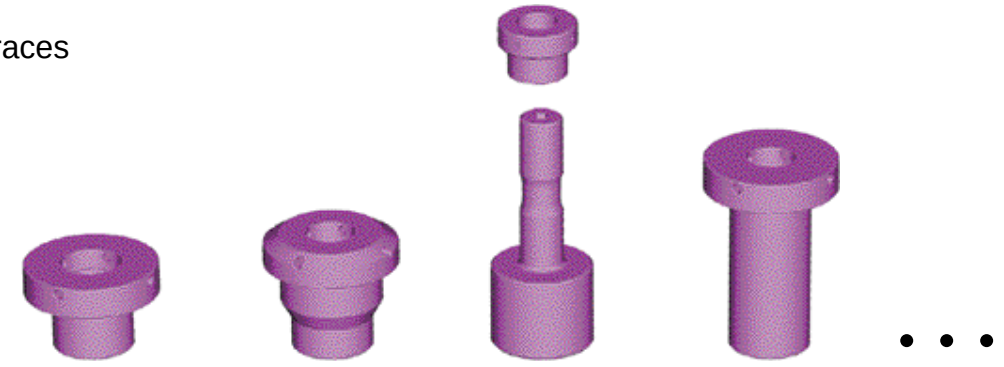

Standard body

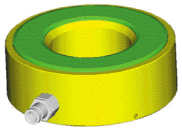

Customized skirts

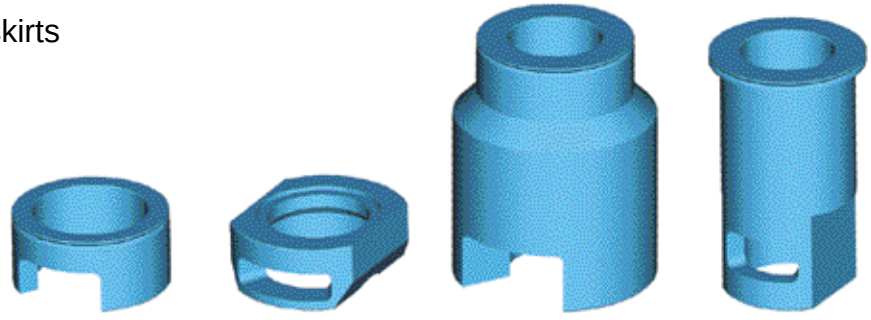

Customized sockets



If your application presents special characteristics which preclude using a standard body, please turn to the page “Special Tensioners”, on pages 48 and 49.

Simultaneous tightening equipment for the cylinder head on large diesel engines



Special Tensioners

You have a specific application which requires a design study. SKF Equipements designs, computes, optimizes and manufactures the hydraulic tensioner to meet your needs.

SKF Equipements offers tailor-made design of the various tensioner components, in compliance with your application requirements. The operating principle remains the same, however new functions can be added. A brief overview of SKF expertise follows:

- The general shape, size and number of components can vary as needed, to fit the accessibility, size restrictions and handling constraints.
- The choice of the materials and heat treatments is adapted to meet the mechanical and weight specifications of an application. SKF tensioners can also be manufactured in lighter materials such as titanium.
- The tensioner environment can require the use of specific hydraulic fluids. Hydrocam tensioners can be designed to work with all types of hydraulic connectors.
- Turning down operations can be motorized and fully automated.
- In cases requiring high accuracy, SKF can supply sensor washers or devices to measure bolt elongation.
- For improved tightening uniformity over several bolts, we recommend either total (preferably) or partial simultaneous tightening.

…

Let us know your needs – we will meet them !

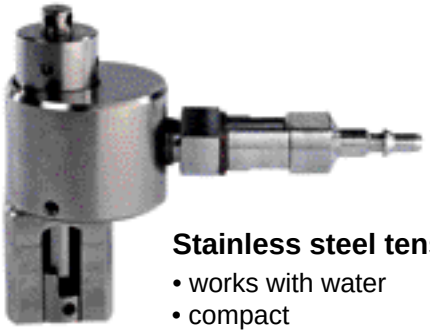

Stainless steel tensioner

- works with water
- compact
- no pollution of the assembly
- environmentally friendly



Monolithic 8-tensioner ring

- simultaneous, homogenous tightening
- quick, simple use



Titanium tensioner

- works with water
- ultra-light
- easy handling
- designed to be handled by a diver in an underwater environment



Compact tensioner

- tightens hard-to-reach bolts
- controls turning-down operations



Micro tensioner

- compact
- tightens very small bolts (M5)
- highly accurate (a few microns of screw elongation)



Tensioner for automatic multiple stud tensioner machines, nuclear reactor vessel opening and closing operations

- remote-controlled
- highly efficient application of high tightening pre-loads
- Excellent efficiency



Tensioner for
500 mm diameter bolts

Tensioners for very large diameter bolts

- Tighten very large diameter bolts
- Automatic piston return
- Retaining sleeve or clamping jaws

Special machines and control systems

Your application requires remote control tightening which is simultaneous, controlled, accurate and totally safe. SKF Equipements researches your application and adds hydraulic tensioners to instrumentation and control systems.

In adding Hydrocam hydraulic tensioners to an instrument, regulation and control system, you automate and protect your tightening. You can also ensure homogenous tightening by using a simultaneous tightening procedure, and improve accuracy by using measurement and control devices. The handling phases can be automated and included in the machine operating process, resulting in reliable, accurate and rapid tightening operations.

The following lists a brief sampling of some of the automated functions commonly found in special tightening machines:

- pressure increase for controlled tensioners
- turning down operations for the nuts to be tightened
- automatic piston return
- stud screwing and unscrewing
- piston stroke control
- measurement of bolt elongation
- continuous measurement of the tightening load

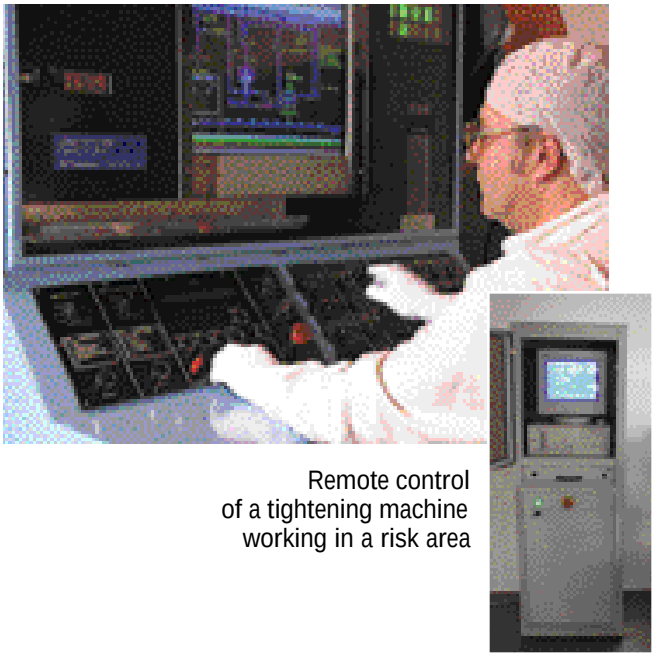

Remote control of a tightening machine working in a risk area

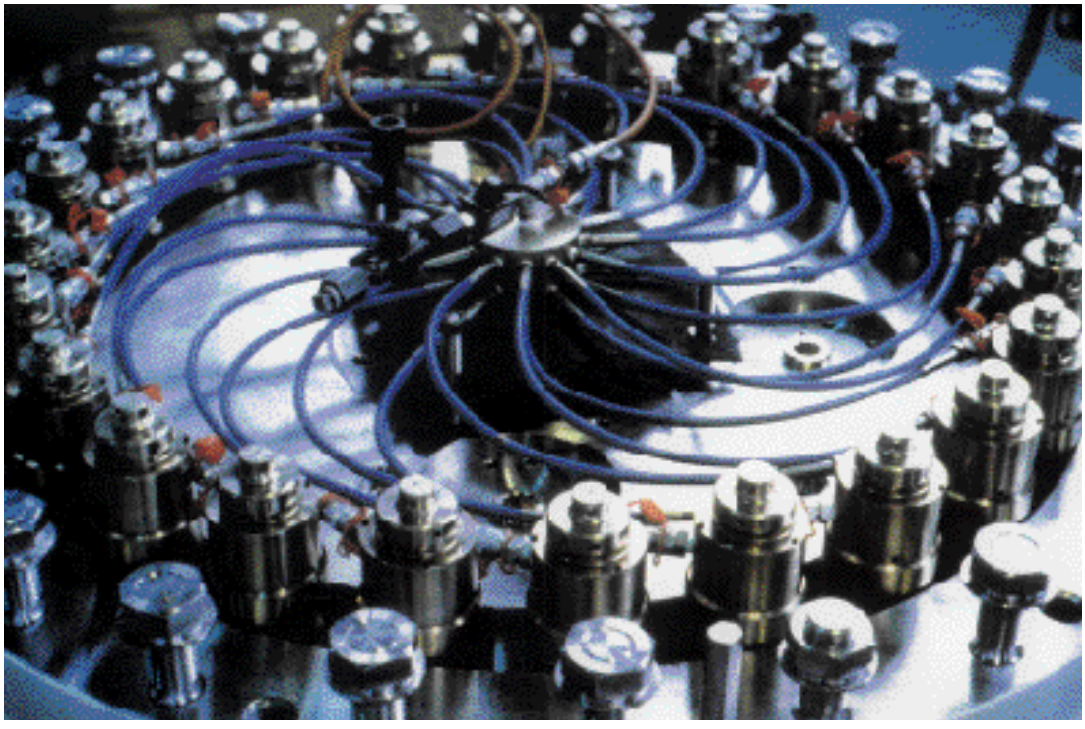

Central feed individual tensioner simultaneous tightening



CAD
of the MST (Multiple Stud Tensioner)
or MSDG (Stud Tightening and Untightening Machine).

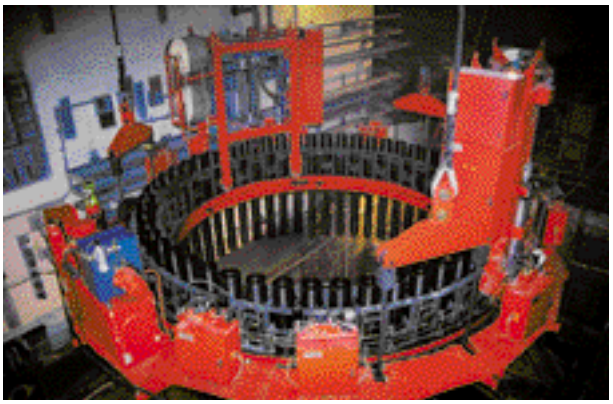

On-site assembly of the MST

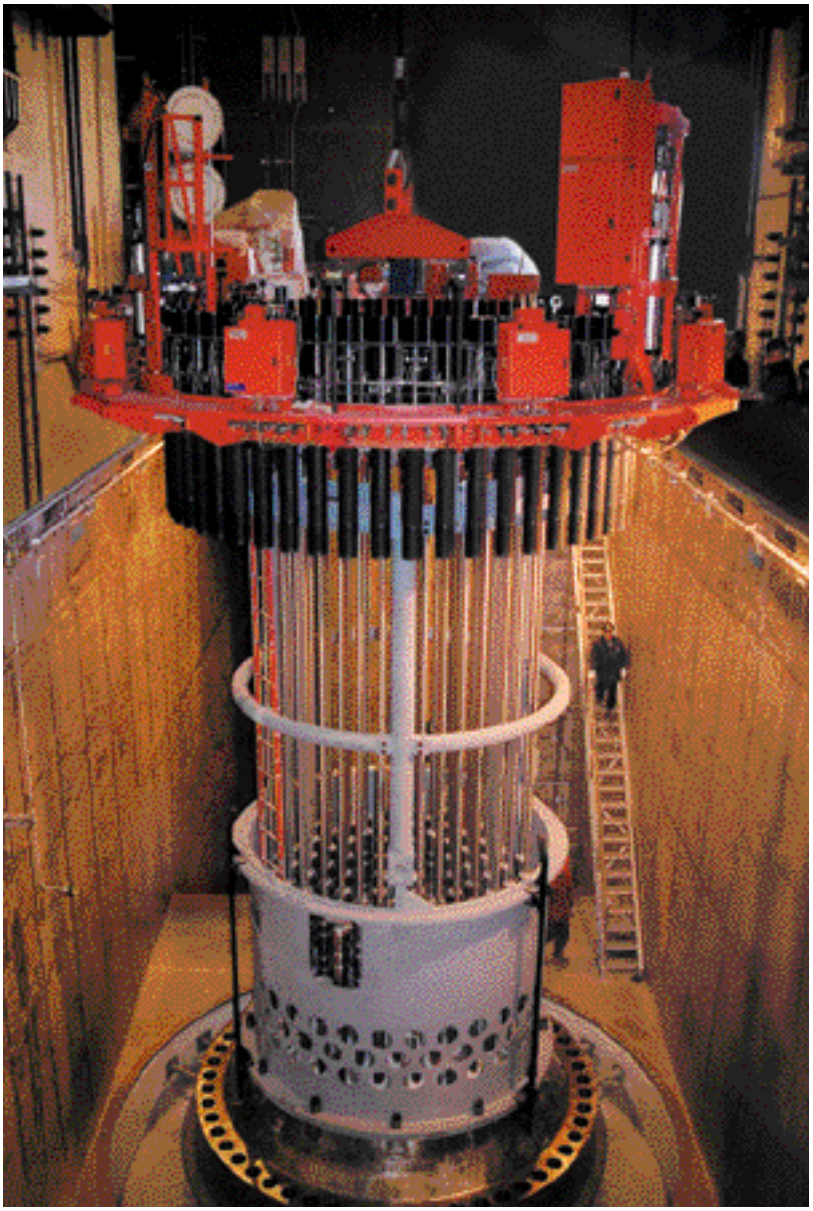



MST remote control panel

Automatic MST machine with 54 studs,
preparing the closure of a nuclear reactor vessel.

Applications

The Hydrocam range provides you with the tensioner which meets your economic criteria

1. Civil Engineering

Safety – Performance

The tightening operations for the clamp bolts on the primary load-bearing cables of suspended bridges are performed with Hydrocam HTA tensioners, known for their flexibility and ease-of-use.
For these and other crucial tasks, where access is difficult and conditions are severe, the tightening tool must guarantee good performance, resistance, efficiency and easy handling.



2. Public works machinery

Critical tightening level and homogeneity

The safety of the bolted assemblies - on crane slewing rings for example – largely depends on the high tightening level and on the uniformity of the applied tightening load.
Hydrocam tensioners such as HTH R, HTC R, HTS 2 or N require little space and apply extremely high, uniform tightening loads in each bolt. The low drag friction coefficients of the seals which equip the hydraulic body ensure high quality assembly and excellent homogeneity.



3.Wind turbines

Rapid service

The use of double-acting HTC R Hydrocam tensions with automatic piston return means fast performance of all the tightening operations on wind turbines, without interrupting production. This guarantees the performance and reliability of these heavy-wear machines, ensuring ongoing electricity production.



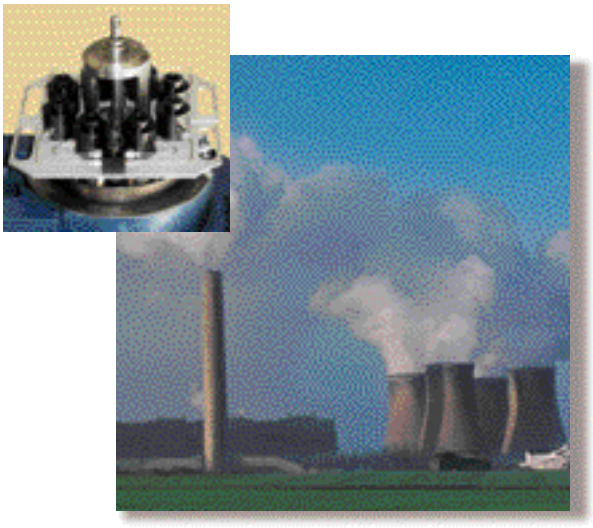

4. Nuclear industry

Safety – Lower dosimetry

Bolted assemblies in the nuclear industry are subject to extremely strict quality rules to ensure safety.
Hydrodcam HTA and HTS standard tensioners, operating with oil or water, alone or simultaneously, meet the demanding nuclear industry requirements for tightening operations.
In addition to standard tensioners, specialized Hydrocam tensioners using automatic feed and control equipment, can be used for remote, rapid tightening of specific assemblies. This reduces contamination and dosimetry risks for the operators.



5. Aeronautics

Precision - Weight reduction

In the aeronautics industry, customized HTS Hydrocam tensioners, used alone or simultaneously, tighten very small bolts with high accuracy, reducing the time required for assembly operations. Hydrocam tensioners take full advantage of the mechanical properties of the main assembly materials used in aeronautics, reducing weight. If necessary, water-based tensioners can be supplied.



6. Diesel Engines

Reduced flywheel mass

Bolted assemblies in engines have to withstand heavy mechanical stresses, particularly dynamic. With the use of customized HTA or HTC R Hydrocam tensioners, you can take full advantage of the mechanical characteristics of the materials in the primary assemblies, leading to reduced volumes and masses, in particular flywheel masses. Engine performance and operating costs are clearly improved.

Company resources and organization at the client's service

The ITE Department at SKF Equipement is totally client-oriented. It disposes of the resources and the organization it needs to meet its customers' needs...

Located in spacious, well-designed premises in France, Paris area





Customer-focused approach combining quality, performance and friendliness.



A team of engineers which combines understanding, expertise, experience and a forward-thinking attitude to analyze clients' needs and provide the best solutions



The Design Department works on the cutting edge (CAD, analytical software and finite element structural analysis)



Control and verification instrumentation to measure hardness, dimensions, surface condition, geometrical defects…



Mechanical test beds to measure loads, stresses and strains, to determine equipment performance and lifetime

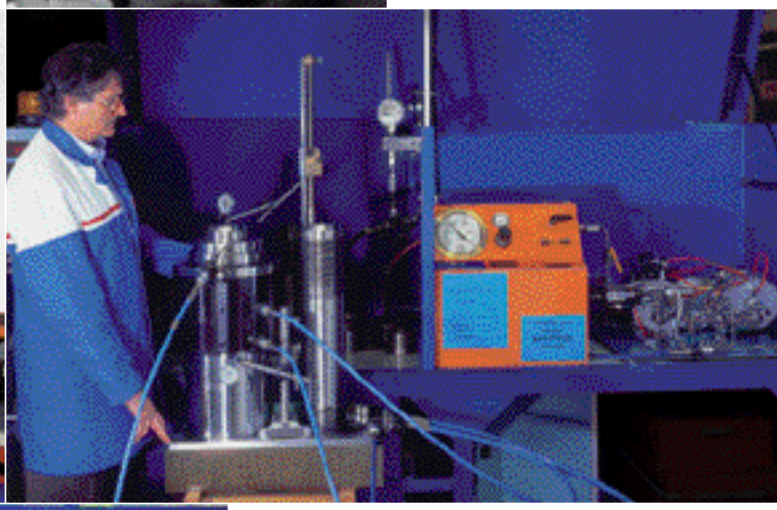

Hydraulic test beds (using oil and water), for low-pressure tests (0-300b), and high pressure tests (300-3000b)



Well-equipped production and assembly workshops.

... and in addition

SKF's quality organization has been acknowledged by ISO 9001 certification ;

A powerful network of partners, subcontractors and suppliers, carefully selected and regularly audited ;

And the entire SKF network, capable of meeting customer demand anywhere in the world.

SKF Equipements' Services

Work alone no longer ! SKF Equipements offers its partnership for all your tightening applications.

Assistance in designing bolted assemblies

You have to design new bolted assemblies or revise the design of existing assemblies.

SKF's vast experience on a wide range of applications has led to the creation of a complete set of theoretical and practical tooling and hardware which can solve nearly any problem encountered in the field of bolted assembly tightening.

SKF can therefore offer its assistance from the very start of the design stage.

This saves you precious time and frees you to concentrate on the design aspects which are at the core of your business.

In addition, you reap all the advantages which result from optimized bolted assembly design: saved space, less weight, increased safety, easier assembly and maintenance.

Assistance in selecting the best tightening method

You are dealing with tightening or loosening problems on an existing bolted assembly.

SKF has faced such problems daily, and has a wide range of solutions.

Turn to SKF for assistance in selecting the most effective tightening method for your needs, given your space constraints, loads, time, environment, cost and other issues.

Expertise and experiments

You would sometimes like to have an expert opinion, or conduct an experiment on bolted assemblies.

Thanks to the wide variety of problems solved with their clients, SKF has gained in-depth expertise in the field. SKF has long been conducting on-going experiments , and has developed specifications, procedures, protocols and instructions…

SKF can help you define, calculate, measure and analyze the static and dynamic loads applied on the bolts in your assemblies, both on stand-by and in service.

SKF offers its services in every area where error or the wrong direction can have serious consequences on costs and schedules.

Checks and tests

You most certainly conduct many checks and tests on your application, however the skilled operators and the proper tooling can be very demanding. This can lead to very complex situations which cannot always be solved in-house.

SKF offers the full range of tooling it has developed over the years, and can provide you with – or design – the specific, effective and practical solution for your problem.

SKF teams are expert users of this equipment, and can modify, adapt or redesign existing tooling to meet your needs.

In a word – rapid, effective service in the testing field.

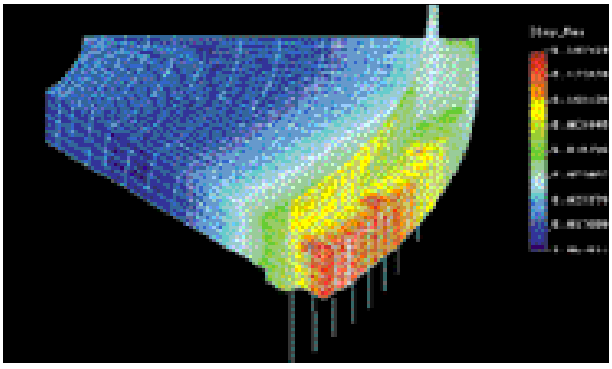

Optimizing the number of rounds required for the partial simultaneous tightening of a 96-bolt flange, using 8 tensioners.

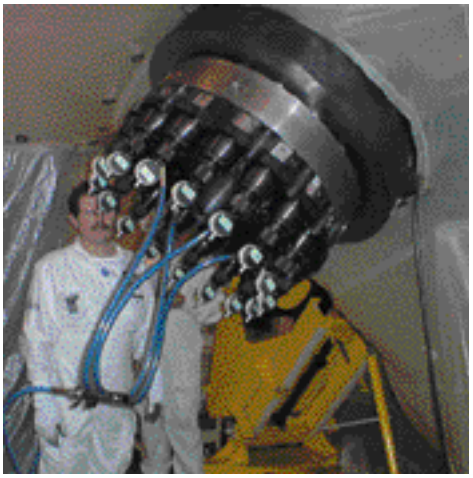

On-site intervention, tightening the man hole hatch on the primary cooling system of a steam generator.

Training

Although the field of bolted assemblies is highly complex and vast, it is relatively rarely included in the curricula followed by engineers and technicians.

Based on its long-standing experience, SKF has developed training programs which can be very useful for your teams dealing with bolted assemblies. SKF can also offer tailor-made programs to meet the specific requirements you have identified.



Training on hydraulic tensioner tightening techniques

Technical support / On-site assistance

There is no lack of jobs to be done in your workshops and on your sites. However, you may not always have skilled employees on hand to do the job where and when it needs to be done.

SKF can send skilled technicians to your workshops and site, to provide you with the help you need.

On-site, in addition to working with the tightening tools, SKF can perform many other tasks, such as:

- repairing and reconditioning the parts to be tightened (cleaning, grinding, adjustment, control …)
- repair and preparation of sealing surfaces
- replacement of assembly parts
- cutting bolts to be replaced
- checking the tightening loads using the most appropriate means, and others.

SKF also provides rental equipment for temporary, short-term use.

Installation and commissioning

You have purchased new bolt tightening equipment. Perhaps your staff is not yet familiar with the equipment, or you prefer or are not able to assign a task force to implementing it.

SKF offers installation and commissioning services, and can also operate the equipment for you each time you need to use it.

Maintenance and repair / in the workshop and on-site

You may not have a repair shop able to maintain and repair the tightening equipment.

SKF can do this work for you, preferably in their own workshops if the material can be sent back, or on-site, if working conditions are conducive to performing maintenance, overhaul and repair on the site.

Industrial partnerships

You are looking for an industrial partner capable of supplying you with regular or periodic service in one or several of the previously described areas.

SKF offers you a partnership arrangement in which SKF commits to supplying the required services in a time frame and way which are to be defined. SKF offers total flexibility to come up with the formula which best meets the client's needs.

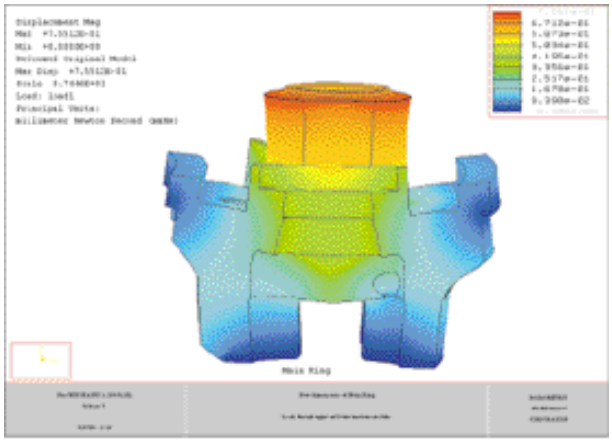

Display of assembly strain during bolt tightening using Hydrocam tensioners.



Kit demonstrating the use of Hydrocam tensioners with the BoltSafe sensor washer.

Tensioner Accessories

High pressure hoses

High pressure hoses are supplied with high pressure self-sealing quick-coupling connectors, in unit lengths up to 300 m. Two types of hose depending on the pressure used:
HFC: operating pressure: 150 MPa:
Bursting pressure: 450 MPa
TFC: operating pressure: 300 MPa:
Bursting pressure: 550 MPa

Designation example:

HFC 1: 1-m long hose,
operating pressure 150 MPa
MFC 2: 2-m long hose,
operating pressure 80 MPa



Ref: MFC, HFC or TFC
(specify length)

High pressure quick-coupling connectors

The self-sealing quick-coupling connectors on the Hydrocam tightening and pressure supply equipment are heavy-duty and easy to use. There are three types of quick-coupling connectors depending on the pressure used: HBC 10; HBC 15; HBC 30.

Designation example:

HBC 15 N/M: quick-coupling male connector,
operating pressure: 150 MPa
HBC 30 N/F: quick-coupling female connector,
operating pressure: 300 MPa



ref: HBC..
(specify pressure)

Distribution blocks

The distribution blocks can simultaneously connect several hydraulic tensioners. They are equipped with high pressure self-sealing quick-coupling connectors. You select the number of outlets.

Designation example:

HDB 1-2: distribution block one inlet – two outlets
HDB 1-3: distribution block one inlet – three outlets



ref: HDB1-..
(specify number of outlets)

Oil can

Hydraulic oil is supplied in 5-liter cans. All Hydrocam tools are delivered fully oiled and ready to use.



ref: HCO 5L

Air-driven hydraulic generating set

This air-driven hydraulic generating set, equipped with an air/oil pressure intensifier, supplies adjustable pressure of 300 MPa, calibrated by the air inlet. For air supply of 0.6 MPa (6 bar), the hydraulic flowrate at 100 MPa is 0.2 l/min. This unit has a class 1 manometer, a 5-liter tank and 2 hydraulic outlets with quick-coupling, self-sealing connectors.
Dimensions: W 340 x D 320 x H 540 mm
Weight: 34 kg.



ref: GHP 20300

Air-driven hydraulic generating set GHP 10200

This air-driven hydraulic generating set, equipped with an air/oil pressure intensifier, supplies adjustable pressure of 160 MPa (200 MPa on request), calibrated by an air inlet. For air supply of 0.6 MPa (6 bar), the hydraulic flowrate at 100 MPa is 0.2 l/min. This hydraulic set has a class 1 manometer, a 5-liter tank, and 2 hydraulic outlets with quick-coupling self-sealing connectors.
Dimensions: W 340 x D 320 x H 440 mm
Weight: 26 kg.



ref: GHP 10200

Electro hydraulic generating set GHE 10200

This electro hydraulic generating set, equipped with a 0.55 kW electric motor, 415/240/110 voltage and a pressure intensifier, supplies pressure of 160 MPa (200 MPa on request). The hydraulic flowrate at 100 MPa is 0.8 l/min. This hydraulic set has a class 1 manometer, a 5-liter tank, and 2 hydraulic outlets.
Dimensions: W 250 x D 170 x H 435 mm
Weight: 27 kg.



ref: GHE 10200

Pressure intensifier

This device enables setting a constant pressure ratio between the inlet and the outlet of the pressure intensifier. The pressure ratio must be defined when ordering.
Two types of pressure intensifiers are available:
ILP: pressure ratio from 1.1 to 5
IHP: pressure ratio from 5 to 10



ref: ILP ou IHP..
(specify pressure ratio)

Self-locking caps for hexagonal nuts

Made of polyethylene
Black
High-performance: the circular hold ring clips on under the nut.
Total protection from pollution, impact, corrosion, chemicals, gouges.



ref: CAP..
(specify bolt dimension)

Sealing kit for Hydrocam bolt tightener hydraulic bodies

The composite sealing kit for the Hydrocam bolt tightener hydraulic bodies good high pressure performance, great wear resistance and a low drag friction coefficient, providing efficiency on the order of 98%. These high performance characteristics contribute to high quality bolted assemblies. Sealing kits for standard tensioners are in stock. The reference refers to the hydraulic body.
Designation examples:
HAK 20: sealing kit for HTA 20 C standard hydraulic body
HSK 50: sealing kit for HTS 50 C standard hydraulic body.



ref: HAK, HSK, HCK or HHK…
(the hydraulic section of the tensioner)

Tommy bar

Tommy bars are used to screw the braces and turn down the nut by rotating the hydraulic tensioner socket. Tommy bar diameters depend on the tensioner model they are used with.
Ref: BR 6-8. BR 10-12. BR 12-14. BR 14-16.



ref: BR..
(specify dimensions, see table page 61).

Double stage manual pump

The double stage manual pump is equipped with a manometer and a 3-m high pressure hose with a self-sealing quick-coupling connector. It has a 2300 cm^3 tank and applies pressure up to 150 MPa (1500 bar). At low pressure, the volume for each piston stroke is 17.5 cm^3. At high pressure, it is 1.25 cm^3. Weight:14 kg.
Comes in a steel carrying case.



ref: PH 1500

Single stage small manual pump

This small single stage manual pump is equipped with a manometer and a 1.5 m high pressure hose with a self-sealing quick-coupling connection. It has a 250 cm^3 tank and applies pressure of 100 MPa (1000 bar).
Volume per piston stroke is 1 cm^3. Weight: 3.5 kg. Comes in a steel carrying case.



ref: PH 1000 S

Single stage manual pump

This single stage manual pump is equipped with a manometer and a 1.5 m high pressure hose with a self-sealing quick-coupling connection. It has a 700 cm^3 tank and applies pressure of 100 MPa (1000 bar).
Volume per piston stroke is 1 cm^3. Weight: 6 kg. Comes in a steel carrying case.



ref: PH 1001

Sockets



Réf: ACC..
(specify bolt diameter)

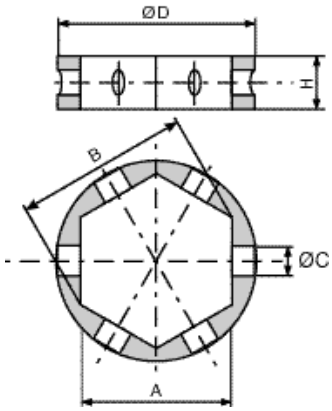

The sockets enable easy turning down (or up) of the hexagonal nuts during hydraulic tensioner tightening (or untightening). The standard socket is a hexagonal bore which fits the application nuts.

Designation example: ACC M 39: socket for M39 bolt diameter
ACC 1 1/4": socket for 1 1/4" bolt

The range of standard sockets covers bolt dimensions from M8 to M150 (5/16" to 6"). See table below.

Stud	outside diameter Ø D	width across flats A	width across points B	Height H	tommy bar Ø C
M 8	27	13	15.0	8	4
M 10	30	17	19.6	10	6
M 12	34	19	21.9	10	6
M 14	41	22	25.4	12	6
M 16	41	24	27.7	12	6
M 18	41	27	31.2	12	6
M 20	41	30	34.6	12	6
M 22	44	32	36.9	12	6
M 24	48	36	41.6	12	6
M 27	52	41	47.3	16	8
M 30	60	46	53.1	16	8
M 33	65	50	57.7	16	8
M 36	68	55	63.5	16	8
M 39	75	60	69.3	20	10
M 42	82	65	75.1	20	10
M 45	88	70	80.8	20	10
M 48	94	75	86.6	20	10
M 52	100	80	92.4	20	10
M 56	105	85	98.2	20	10
M 60	111	90	103.9	20	10
M 64	117	95	109.7	24	12
M 68	123	100	115.5	24	12
M 72	129	105	121.3	24	12
M 76	134	110	127.1	24	12
M 80	142	115	132.8	28	14
M 85	148	120	138.6	28	14
M 90	159	130	150.1	28	14
M 95	165	135	155.9	28	14
M 100	177	145	167.5	28	14
M 110	189	155	179.0	28	14
M 120	208	170	196.3	28	14
M 125	220	180	207.9	28	14
M 130	226	185	213.6	28	14
M 140	243	200	231.0	28	14
M 150	254	210	242.5	28	14

In some applications, the nuts may be cylindrical or have special shapes. For cylindrical nuts, sockets are not required. For special shape nuts, SKF manufactures custom-made sockets.

The BoltSafe sensor washer

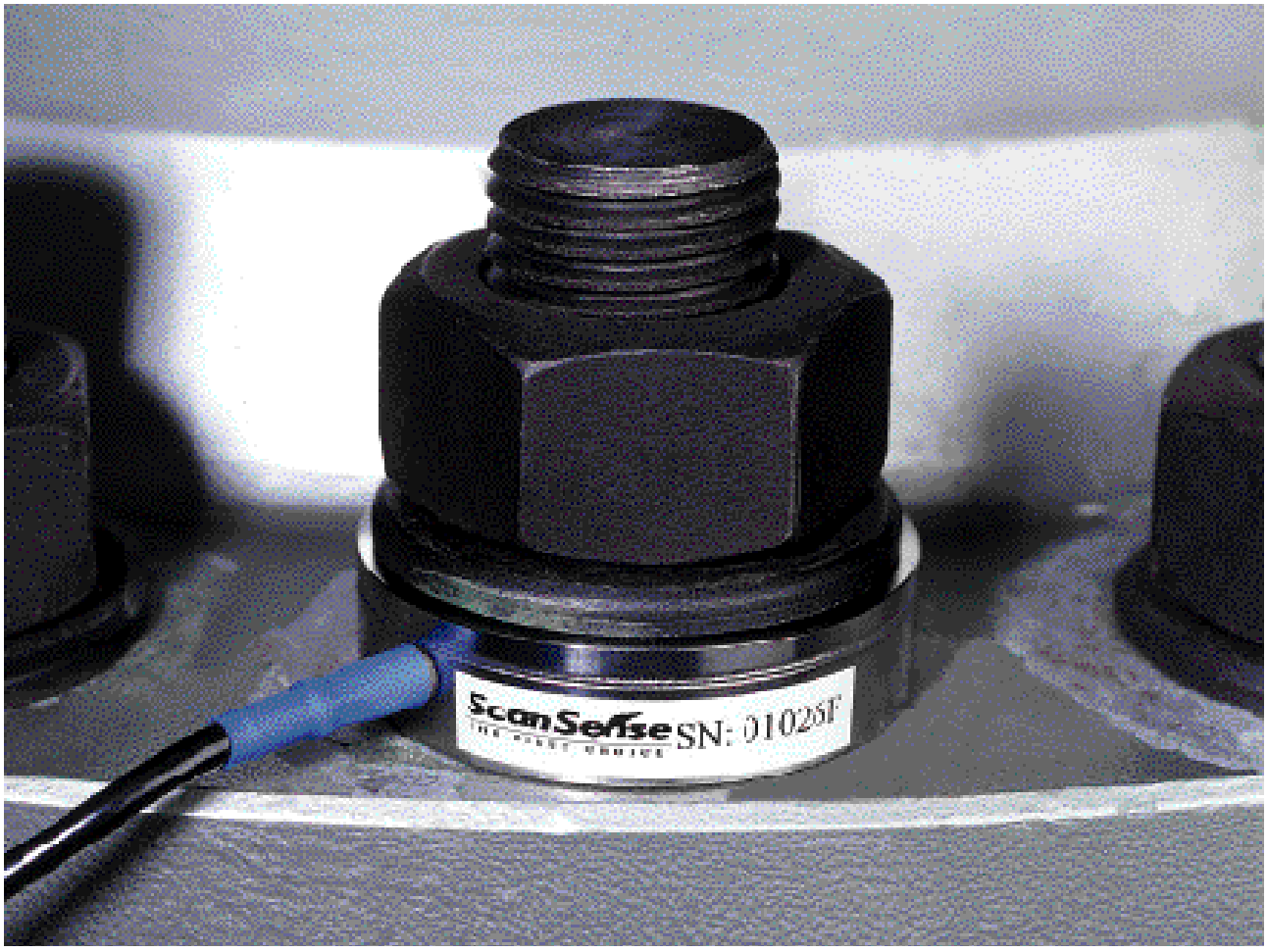

What is the tightening pre-load in my bolt ?

Your bolted assembly is a critical part of your application, and reliability is crucial. The BoltSafe sensor washer, designed by the ScanSafe company, provides you with the information you need on the reliable operation of your application.

BoltSafe washers are integrated into your application, where they are as easy to use as any normal washer. Using a handheld reader or a PC connected to your application's BoltSafe networks, you can accurately monitor the tightening pre-load of each BoltSafe washer equipped bolt in your application. This way, you can easily check if the prescribed tightening load remains throughout operations. You ensure operational safety and the reliability at low cost.

What is the accuracy ?

BoltSafe washers are an excellent means of monitoring, for they are capable of detecting any load variation in the bolt.

The accuracy of the measurement of the absolute load in the bolt depends on several factors. First of all, Hydrocam tensioners must be used to guarantee measurement accuracy, particularly in the case where the washer is placed directly under the nut. Indeed, after turning down the nut and releasing the pressure of the tensioner, solely the axial tightening pre-load is applied on the washer, whereas, with torque tightening, torsion stresses are induced in the BoltSafe washer. In addition, torque tightening misaligns the washer with respect to the bolt, which significantly impairs measurement accuracy.

Accurate load measurement also depends on assembly quality, such as the perpendicularity of the bearing faces with respect to bolt axis, surface flatness, absence of holes, gouges and roughness on the assembled parts in contact with the BoltSafe washer faces.

How does it work ?

The BoltSafe washer operating concept is based on the fact that material's ability (depending on its structural quality) to conduct a magnetic field is an almost linear function of the stress inside the material. Each washer contains an electronic chip which processes the measurement and transforms it into a digital signal. The chip provides unique identification of the BoltSafe washer and integrates it in the BoltSafe washer network.

Optimum tightening with BoltSafe washers and Hydrocam tensioners.

In the case of tightening of a flange or a bolted assembly, the use of Hydrocam tensioners on each bolt is sufficiently efficient to avoid the need for a BoltSafe sensor washer on each bolt. A few BoltSafe washers are sufficient. The Hydrocam tensioner ensures the homogeneity and the repeatability of the tightening, and the washer provides knowledge of the bolts' pre-load with increased accuracy.

If the number of tensioners used is lower than the number of bolts in the assembly, the number of BoltSafe washers on the bolts should be increased. This way, the BoltSafe washer network will more easily detect variations in the pre-load on the bolts when the specific procedure is applied to a partial simultaneous tightening (see simultaneous tightening in the Bolt-tightening Handbook).

Lastly, efficient monitoring of load in operation will depend on the positioning of the BoltSafe washers, which must be carefully chosen.



Hydrocam tensioner tightening with the BoltSafe CMS tightening measurement washer.

Where is the BoltSafe washer used ?

BoltSafe washers are already used in every kind of bolted assembly which is subjected to load variations due to vibrations, changes in temperature, pressure, external loads or any other mechanical influence. In these and other situations, BoltSafe washers can monitor the tightening level.

Add your application to the growing list using BoltSafe washers for accurate measurement.



Monitoring

The tightening level of your application can be monitored in several different ways depending on the number of BoltSafe washers and on the security and monitoring program in place for your application.

Monitoring individual BoltSafe washers

If a number of BoltSafe washers are individually installed throughout your application, each washer can be read with a simple SM-100 handheld reader, which can read two types of BoltSafe washers:

- the Bolt Safe CMS washer (Continuous Monitoring System) connected to the SM-100 by a cable
- the BoltSafe PMS washer (Periodic Monitoring System) which is read through a probe in contact with an electronic interface in the washer.

There is also a SM-200 reader similar to the SM-100 reader, yet with an additional storage function to store the information from 255 BoltSafe washers. This information can be downloaded to a PC using BS-2000 software.

With this monitoring system, the operator must come close to each BoltSafe washer to read the measurement.

Monitoring a network of BoltSafe washers

The BoltSafe washers in your application can also be connected to a central station, the CM-1000, which displays the tightening load level on each washer. In this case, a pocket computer (Palm Top) or a portable computer (laptop) is used to interrogate, identify and store the measurement from each one of the BoltSafe washers in the network. This reader can then be directly connected to a PC to download the data using BS-2000 software.

With this monitoring system, the operator reads the BoltSafe washer information from a single spot, close to the application.

Equipment description	Reference
Handheld reader with no memory	SM-100
Handled reader with memory	SM-200
BoltSafe network adapter	CM-1000
BoltSafe analysis and display software	BS-2000

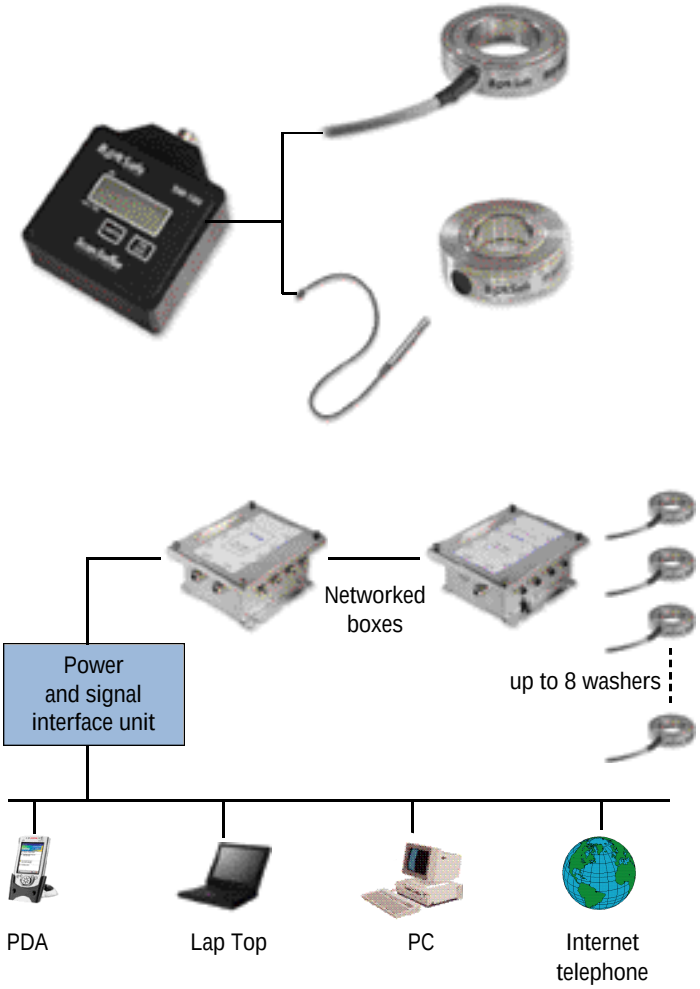

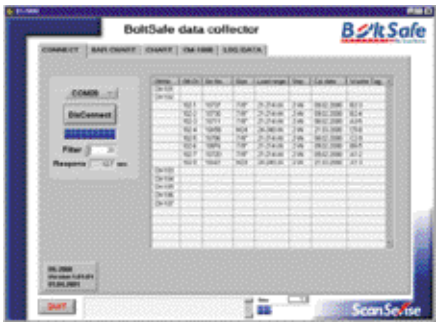

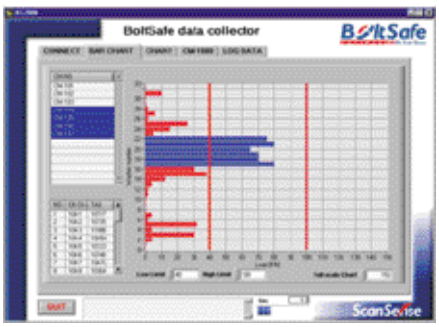

The BS-2000 software processes the data from the BoltSafe washers.

Remote monitoring of the BoltSafe network

The BoltSafe washer network in a strategic application can be an integral part of a company's security and monitoring system. The objective is to detect and warn of any abnormal situation reflected by variations in the tightening pre-load in the bolts in the application.

In this monitoring arrangement, the BoltSafe washers are connected to interconnected CM-1000 stations. A single network station is then connected to a PC (RS-232 connection) and to the BS-2000 program, where warning levels can be programmed to warn the overall surveillance system. Or, the PC can be remotely polled and can provide information from afar

The BS-2000 program

The BS-2000 program was specially designed to provide the user with user-friendly interface enabling him to instantaneously review residual pre-tension directly on the screen. The program is easy to use and to understand. It uses the structures, icons and drag-and-drop functionality from the standard Windows environment.

Residual pre-tension data can be analyzed in three different ways (list, bar chart and histogram) and can be saved to files or printed.

BS-2000 software can also be concurrently used to upload data recorded in the SM-200 reader or from a hand-held reader.

In the case of remote surveillance, software functions can be added to provide access to the monitored BoltSafe network by all control systems.

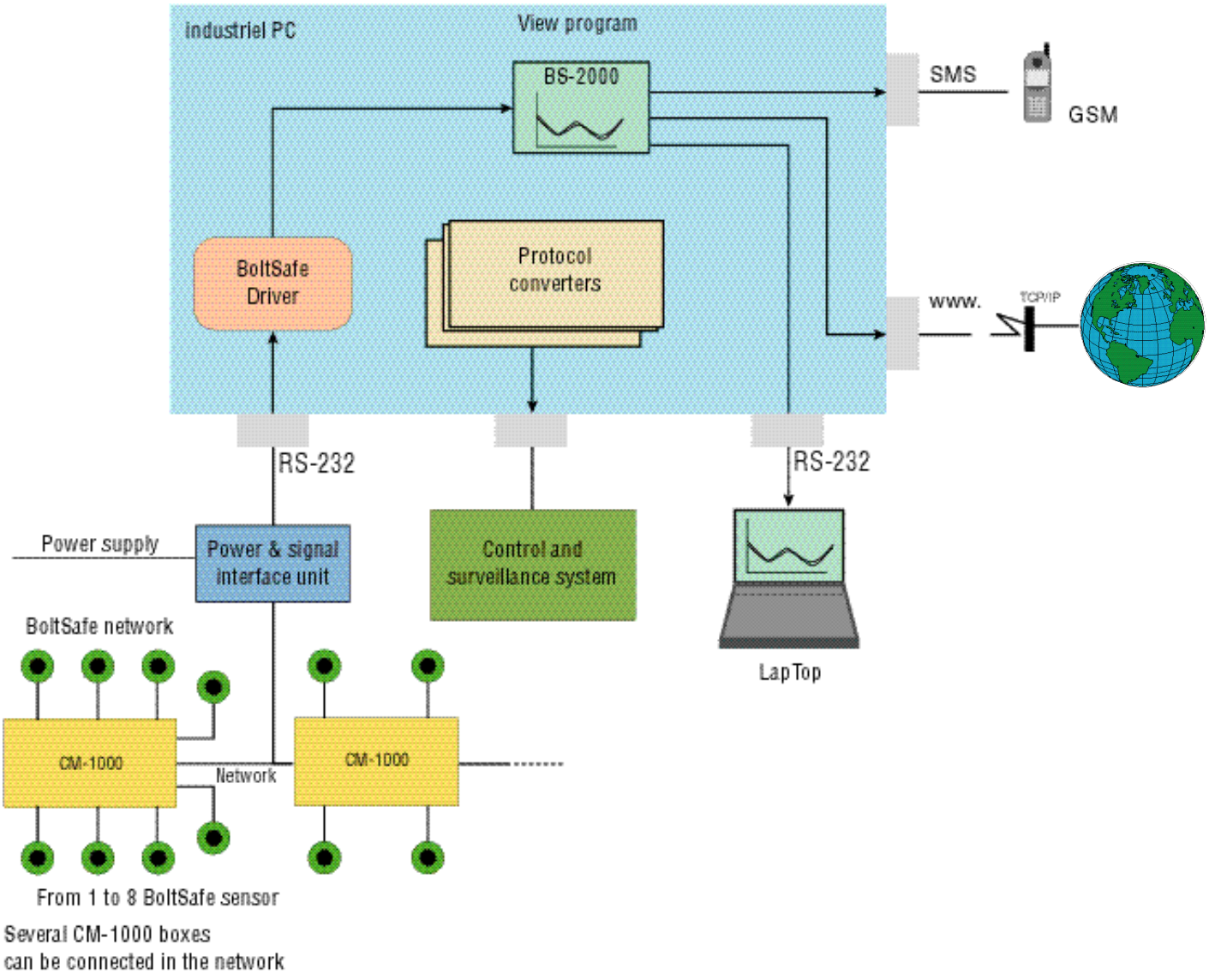

The BoltSafe By Scan-Sense CMS washer

Standard range



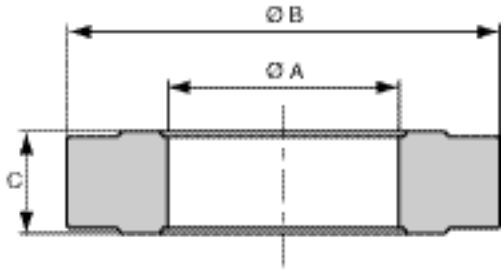

The BoltSafe CMS (Continuous Monitoring System) washer is connected to a SM-100 or CM-1000 station via cable.

Metric system

Bolt description	Bolt diameter (mm)	Inside diameter A (mm)	Outside diameter B (mm)	Thickness C (mm)	Weight (gr)	Maximum tightening load (kN) Class 10.9
M20	20	20.4	37	14	73	116
M22	22	22.4	40	14	85	208
M24	24	24.4	44	14	104	239
M27	27	27.4	50	14	137	315
M30	30	30.6	56	17	214	385
M33	33	33.6	58	17	218	480
M36	36	36.6	66	17	295	560
M39	39	39.6	68	17	300	670
M42	42	42.6	75	20	445	772
M45	45	45.6	80	20	506	905
M48	48	48.6	86	20	591	1018
M52	52	52.6	92	20	669	1221
M56	56	56.6	100	20	798	1408
M60	60	60.8	108	23	1083	1647
M64	64	64.8	114	23	1196	1794

Imperial system

Bolt description	Bolt diameter (mm)	Inside diameter A (mm)	Outside diameter B (mm)	Thickness C (mm)	Weight (gr)	Maximum tightening load (kN) Class 10.9
7/8''	22.2	22.6	47	14	133	214
1''	25.4	25.8	52	14	160	280
1 1/8''	28.6	29	57.1	14	191	354
1 1/4''	31.8	32.3	63	17	286	437
1 3/8''	34.9	35.5	69	17	343	529
1 1/2''	38.1	38.7	74	17	391	629
1 5/8''	41.3	41.9	80	20	543	739
1 3/4''	44.5	45.1	85	20	608	857
1 7/8''	47.6	48.2	91	20	698	983
2''	50.8	51.4	98	20	816	1119
2 1/4''	57.2	57.8	108.8	23	1156	1416
2 1/2''	63.5	64.3	116.6	23	1289	1748

The BoltSafe PMS washer

Standard range



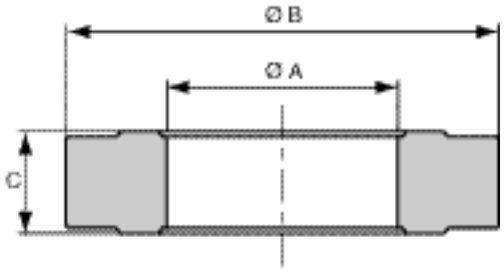

The BoltSafe PMS (Periodic Monitoring System) washer. Measurement is read through a probe in contact with an electronic interface in the washer.

Metric system

Bolt description	Bolt diameter (mm)	Inside diameter A (mm)	Outside diameter B (mm)	Thickness C (mm)	Weight (gr)	Maximum tightening load (kN) Class 10.9
M30	30	30,6	64.3	20	372	385
M33	33	33,6	68.4	20	413	480
M36	36	36,6	72.8	20	462	560
M39	39	39,6	78	20	528	670
M42	42	42,6	83	20	593	772
M45	45	45,6	87.6	20	655	905
M48	48	48,6	92	20	716	1018
M52	52	52,6	97.2	20	784	1221
M56	56	56,6	102	20	845	1408
M60	60	60,8	108	23	1083	1647
M64	64	64,8	114	23	1196	1794

Imperial system

Bolt description	Bolt diameter (mm)	Inside diameter A (mm)	Outside diameter B (mm)	Thickness C (mm)	Weight (gr)	Maximum tightening load (kN) Class 10.9
1 1/4''	31,8	32,3	67	20	401	437
1 3/8''	34,9	35,5	73	20	474	529
1 1/2''	38,1	38,7	78	20	535	629
1 5/8''	41,3	41,9	84	20	619	739
1 3/4''	44,5	45,1	86	20	628	857
1 7/8''	47,6	48,2	91	20	698	983
2''	50,8	51,4	98	20	816	1119
2 1/4''	57,2	57,8	108,8	23	1156	1416
2 1/2''	63,5	64,3	116,6	23	1289	1748

Glossary of terms

Bolt Class

Category of bolts defined by the mechanical characteristics of failure limit and yield point.
Example: Class 12-9 bolt
The first figure indicates one hundredth of the failure limit in MPa
The second figure indicates the coefficient in 10ths that would have to be applied to this failure limit in order to find the yield point.
- Failure limit: 1200 MPa
- Yield point: 1080 MPa

Tensile stress

The relation between the tensile strength exerted on the bolt and its unit area.

Hydraulic load

Force transmitted during tightening operation, by the hydraulic tensioner to the bolt, produced by the hydraulic pressure from the hydraulic area of the tensioner.

Residual load

Force or pre-tension applied on the bolt when the nut has been turned down and the hydraulic pressure has been released.

External load

Force applied on the bolted assembly from operation of the application.

Elongation

The stretching of the bolt by tensile stress.

Stud

A bolt which is threaded on both ends over a certain length. Most often, the central part remains smooth and is generally smaller than the threaded sections.

Yield point

The maximum stress point possible in a bolt in order to undergo no elongation when the tensile stress stops. Beyond this stress limit, the bolt sustains permanent strain.

Failure limit

Maximum possible stress causing the failure of the bolt.

Tightened length

Distance between the bearing face under the nut and the bearing face under the bolt head or under the other nut head if it is a stud.

Pre-stressing

Stress applied to the bolt when it is tightened, and the result of the relation between the residual load and the equivalent bolt area. Prestress does not take into account the stress from the external load.

Bolt stiffness

The theoretically constant ratio between the tensile strength applied on a bolt and the elongation due to this strength. Bolt stiffness depends on the area, the modulus of elasticity and the tightened length.

Automatic return

A mechanical device on certain tensioners which returns the piston to its original position when tensioner pressure stops.

Equivalent bar area

Cylinder section modeling the threaded part of a bolt, subjected to uniform tension. The calculation of cylinder diameter is based on thread diameter and pitch.

Hydraulic area

Piston area subjected to hydraulic pressure.

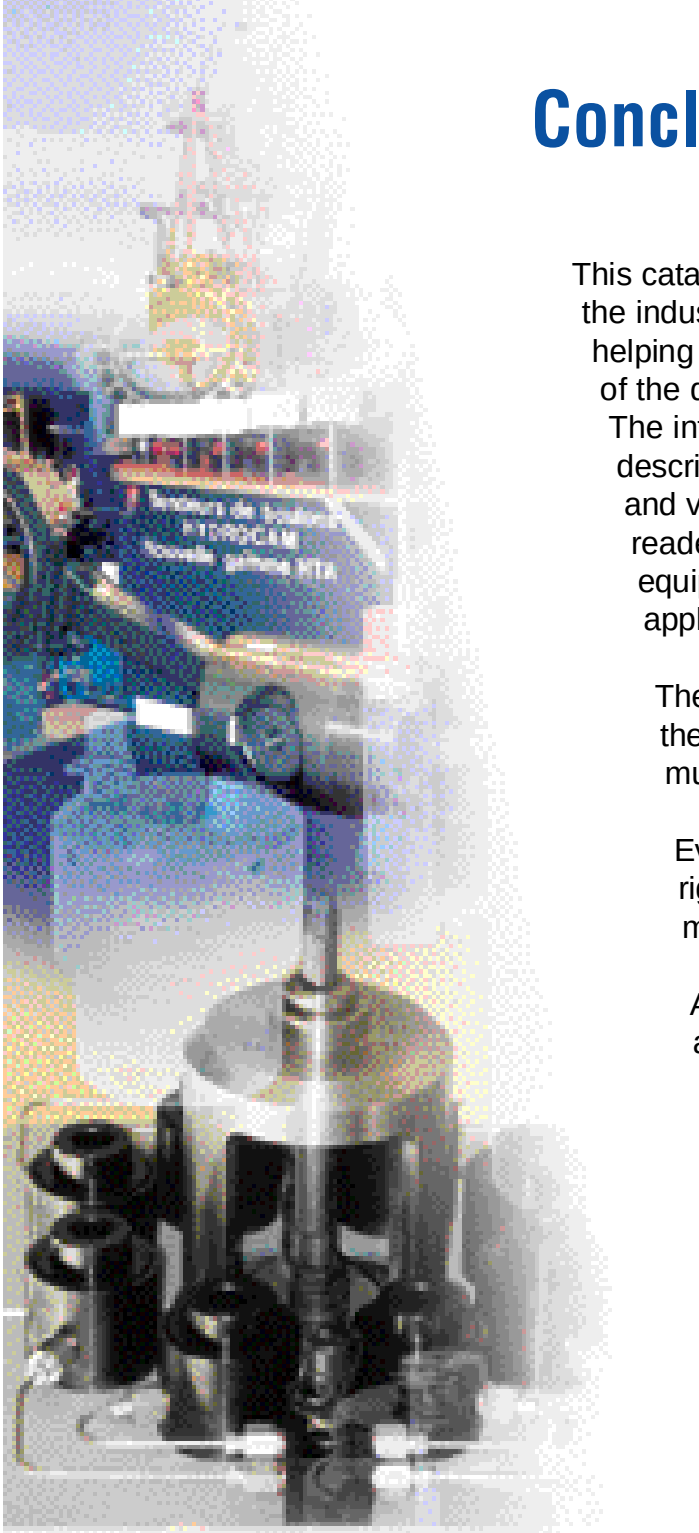

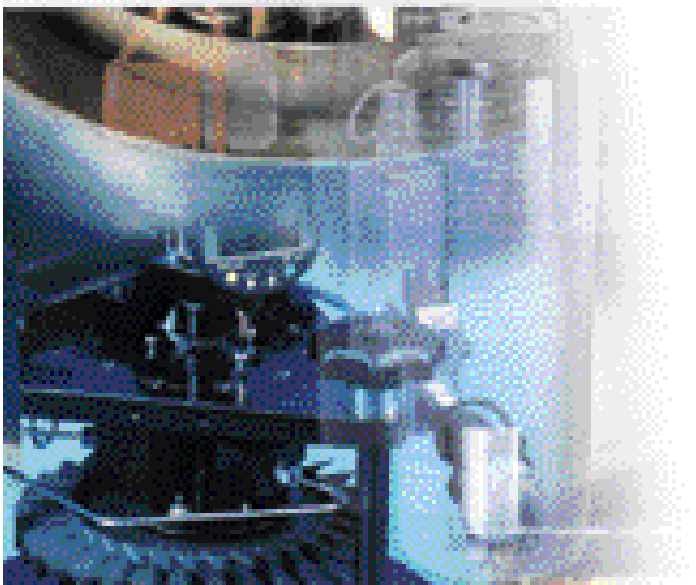

Conclusion

This catalogue illustrates SKF Equipements expertise in the industrial tightening field. This catalogue is aimed at helping bolted assembly designers from the very start of the design stage for bolt-tightening applications. The information, the recommendations and the description of the total product range, with its diverse and varied product characteristics, provide the reader with everything he needs to define the equipment which best meets the needs of his application.

The crucial message is that tightening is one of the most critical steps in a bolted assembly, and must be thoroughly studied.

Every bolted assembly must be tightened just right. There is no such thing as “too little or too much tightening”.

And SKF Equipements can help you define and implement what is just right for you.

SKF Equipements can:

- help you optimize your assemblies
- help you choose the tensioner(s) adapted to your application
- design custom tensioners for your needs
- manufacture special tightening machines.

Industrial tightening is our profession.
We can help you concentrate on yours.

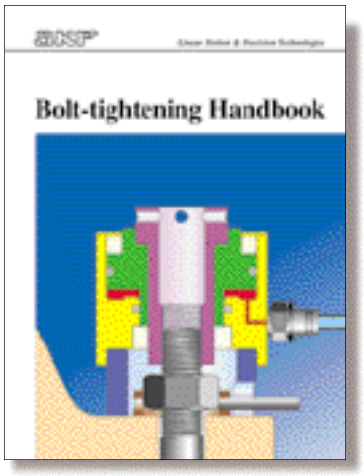

Fax / / date

From:

Company _____

Address _____

_____

Name _____

Tel N° _____

Fax N° _____

I would like price information on the following models:

Send to

SKF Equipements

Département Techniques de Serrage Industriel
30-32, avenue des Trois-Peuples
F-78180 Montigny-le-Bretonneux

Fax: 33 1 30 12 69 79

Tel.: 33 1 30 12 69 76

Price request

Note: for descriptions and references, see the following sections:
- standard tensioners pages 34 to 45
- accessories pages 58 à 61

RESERVED FOR SKF

N°	Equipment description	reference	quantity	SKF Equipements offer N°54 - unit price	delivery*

*delivery date upon ordering

Comments:

For all specific requests, please call us at + 33 1 30 12 69 79

Fax / / date

From:

Company _____

Address _____

_____

Name _____

Tel N° _____

Fax N° _____

I would like information on Hydrocam Tensioners:

Send to

SKF Equipements

Département Techniques de Serrage Industriel
30-32, avenue des Trois-Peuples
F-78180 Montigny-le-Bretonneux

Fax: 33 1 30 12 69 79

Tel.: 33 1 30 12 69 76

Information on the Hydrocam Tensioner(s)

Application: ❑ existing ❑ being validated

_____

_____

Equipment: _____

Parts to be tightened: _____

Bolt characteristics

(specify numbers)

Thread diameter (d): _____
Pitch: _____
Bolt diameter (D): _____
Extending length (l): _____
Nut(s): _____
- width across flats (f): _____
- height (h): _____

Washer(s): _____
- ϕ outside (A): _____
- Thickness (e): _____

Bolt material: _____
Yield point: _____
Class: _____

Bolt distribution

(supply diagram if possible)

Distribution diameter: _____
Number of screws: _____
Distance between 2 bolts: _____

Optimizing the bolted assembly

(dimensions and number of bolts)

yes ❑ no ❑

External load: _____
static ❑ dynamic ❑

Application point: _____
(diagram if possible)

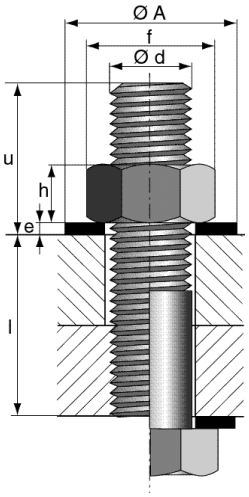

Current tightening method (specify units)

❑ Torque (wrench) _____
- torque applied: _____
- elongation : _____

❑ Heating rod _____
- temperature: _____
- screwing angle: _____

❑ Other methods _____

Hydraulic tensioner tightening

Residual pre-load (per bolt) _____

Hydraulic load (per bolt) _____

Simultaneous tension: ❑ yes ❑ no
How much: _____

Existing: ❑

Feed to provide for: ❑
- ❑ manual pump
- ❑ air-driven generating set
- ❑ Electro hydraulic generating set

Space available for the tensioner

Height (X): _____

Diameter (Y): _____

Local obstruction (Z1): _____
(Z2): _____
(Z3): _____

Drawings enclosed: _____

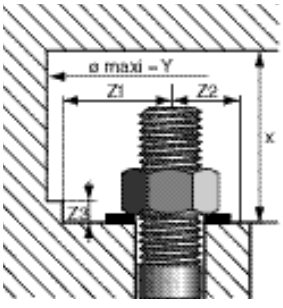

SKF Equipements



- sells the SKF Linear Motion product range: driving systems (ball & roller screws, linear motors), actuation systems, positioning systems, precision bearings and spindles for machine tools.
- offers top-quality components and industrial equipment parts such as:
  - modular solutions for automation
  - gas springs
  - shock absorbers
  - bushings
  - precision chains
  - seals
  - wheel and ball transfer units

- designs and manufactures the HYDROCAM range of bolt tensioners
- backs up the quality of its services and products in the form of ISO 9001 certification

Bolt-tightening products and services provided by SKF Equipements



HYDROCAM bolt tensioners:

- complete standard range including six different types covering a large range of bolt sizes: M8 to M160 and loads of 50 kN to 8500 kN
- standard tensioners adaptable according to application interface
- special tensioners designed for dedicated applications, extending the range of bolt sizes from M5 to M500



Sensor washers for measuring tightening loads



Accessories:

- manual pumps delivering various pressure ranges: 700, 1000 or 1500 bar
- air-driven hydraulic power units delivering various pressure ranges: 700, 1000, 1500, 2000 or 3000 bar
- electrically driven hydraulic power units delivering various pressure ranges: 700, 1000, 1500 or 2000 bar
- high-pressure hoses of all lengths; distribution blocks
- pressure intensifiers.



Simultaneous tightening machines and systems (with optional automation)



Standard and customised automatic remote-control systems



Services:

- assistance in design of bolted joints,
- assistance in selecting most appropriate tightening method,
- expertise and experimentation,
- industrial partnerships
- checks and tests,
- training,
- technical assistance / on-site intervention,
- installation and commissioning,
- maintenance and repairs in our workshop or on site,
- distance monitoring.

Throughout the world, SKF local companies or offices represent SKF's ITE department for all queries regarding bolt-tightening equipment.

Contact: SKF Equipements - ITE Departement
30-32 avenue des Trois Peuples - 78180 Montigny-le-Bretonneux - France
Tel.: +33 1 30 12 69 76 - Fax: +33 1 30 12 69 79 - http://www.hydrocam.skf.com

Europe

Austria
Linear Motion
SKF Österreich AG
Phone : +43 22 36 6709-0
Fax : +43 22 36 6709-270
e-mail : multitec.austria@skf.com

Benelux
SKF Multitec Benelux B.V.
Phone : +31 030 6029029
Fax : +31 030 6029028

Sales Office Belgium /Luxembourg
Phone : +32 2 5024270
Fax : +32 2 5027336
e-mail : multitec_benelux@skf.com

France
SKF Equipements
Phone : +33 1 30 12 73 00
Fax : +33 1 30 12 69 09
e-mail : equipements.france@skf.com

Germany
SKF Linearsysteme GmbH
Phone : +49 9721 657-0
Fax : +49 9721 657-111
e-mail : lin.sales@skf.com

Italy
SKF Multitec S.p.A.
Phone : +39 011 57 17 61
Fax : +39 011 57 17 633
e-mail : multitec.italy@skf.com

Nordic area
SKF Multitec Sweden
Phone : +46 42 25 35 00
Fax : +46 42 25 35 45/46

Sales Office Norway
Phone : +47 22 30 71 70
Fax : +47 22 30 28 14

Sales Office Denmark
Phone : +45 65 92 77 77
Fax : +45 65 92 74 77

Sales Office Finland
Phone : +358 94 52 97 52
Fax : +358 94 12 77 65

e-mail : multitec.nordic@skf.com

Spain
SKF Productos Industriales S.A.
Phone : +34 93 377 99 77
+34 93 377 99 07
Fax : +34 93 474 2039 / 3156 / 2156
e-mail : prod.ind@skf.com

Switzerland
Linear Motion
& Precision Technologies
Phone : +41 1 825 81 81
Fax : +41 1 825 82 82
e-mail : skf.schweiz@skf.com

United Kingdom
SKF Engineering Products Ltd.
Phone : +44 01582 490049
Fax : +44 01582 496574
e-mail : skf.epl@skf.com

Americas

USA
SKF Motion Technologies
Phone : +1 610 861-4800
Toll free : +1 800 541-3624
Fax : +1 610 861-4811
e-mail : motiontech.usa@skf.com

Asia

Japan
SKF Japan Ltd.
Phone : +81 3 3436 4129
Fax : +81 3 3578 1014
e-mail : skf.japan@skf.com

http://www.linearmotion.skf.com

For all other Countries contact:

Linear Motion & Precision Technologies

Phone: +39 011 9852553
Fax: +39 011 9852202
e-mail: motion.technologies@skf.com

D.710-298. **ALBACORE** - 33 (0)1 47 37 13 13 - 2001 - Photos: SKF, V. GRENILLET, F. PROUST for ALBACORE.

Linear Motion & Precision Technologies

Publication n° TSI 1102 AE